THIS DRAWING IS UNPUBLISHED. RELEASED FOR PUBLICATION 20
© COPYRIGHT 20 BY - ALL RIGHTS RESERVED.

PART NUMBER	REV	FIRST USED	A	B	C	DESC
2215032-1	C	2143331-7(2297082-3), 2143331-8(2297082-4)	118.6	116	33.5	1X6 ASSY SEATING TOOL
2215032-2	C	1-2057042-0, 1-2057042-1	61.6	59	33.5	1X3 ASSY SEATING TOOL
2215032-3	B	2170567-6, 2170567-7	80.6	78	33.5	1X4 ASSY SEATING TOOL
2215032-4	A	2143331-2(2297082-1), 2170023-2(2297082-2)	118.6	116	28.5	1X6 ASSY SEATING TOOL
~~2-2215032-1~~	~~A~~	~~2143331-7, 2143331-8~~	~~-~~	~~116~~	~~-~~	~~1X6 ASSY WALL SUPPORT~~
~~2-2215032-2~~	~~A~~	~~1-2057042-0, 1-2057042-1~~	~~-~~	~~59~~	~~-~~	~~1X3 ASSY WALL SUPPORT~~
~~2-2215032-3~~	~~A~~	~~2170567-6, 2170567-7~~	~~-~~	~~78~~	~~-~~	~~1X4 ASSY WALL SUPPORT~~

SUPERSEDED BY: 2215093-6
SUPERSEDED BY: 2215093-3
SUPERSEDED BY: 2215093-4

REVISIONS

P	LTR	DESCRIPTION	DATE	DWN	APVD
	A	INITIAL RELEASE	04JUN2014	CZ	VL
	B	SEE ECR-15-008900	11JUN2015	CZ	VL
	C	SEE ECR-17-010244	11JUL2017	CZ	DP

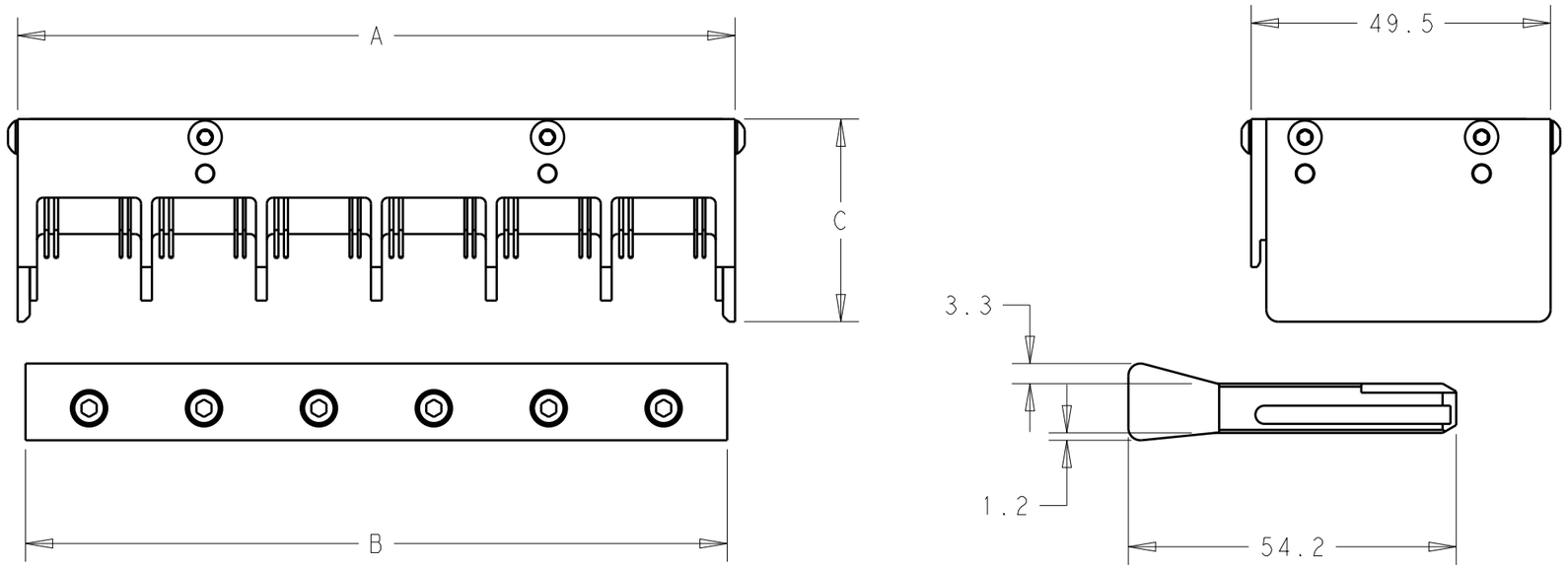

THIS DRAWING IS A CONTROLLED DOCUMENT.

DIMENSIONS: mm

TOLERANCES UNLESS OTHERWISE SPECIFIED:
0 PLC ±-
1 PLC ±-
2 PLC ±-
3 PLC ±-
4 PLC ±-
ANGLES ±-

MATERIAL -
FINISH -

DWN C.ZHU 29MAY2014
CHK E. PRICE 29MAY2014
APVD V.I 29MAY2014
PRODUCT SPEC SEE NOTE
APPLICATION SPEC -
WEIGHT -

CUSTOMER DRAWING

TE Connectivity

NAME ASSY SEATING TOOL
QSFP, BEHIND BEZEL
-

SIZE	CAGE CODE	DRAWING NO	RESTRICTED TO
A3	00779	C-2215032	-

SCALE 1:1 SHEET 1 OF 1 REV C

1470-19 (3/13)