THIS DRAWING IS UNPUBLISHED. RELEASED FOR PUBLICATION 20
© COPYRIGHT 20 BY TYCO ELECTRONICS CORPORATION. ALL RIGHTS RESERVED.

LOC	DIST
GP	00

REVISIONS

P	LTR	DESCRIPTION	DATE	DWN	APVD
	A	RELEASED	01JUN2007	RG	DO

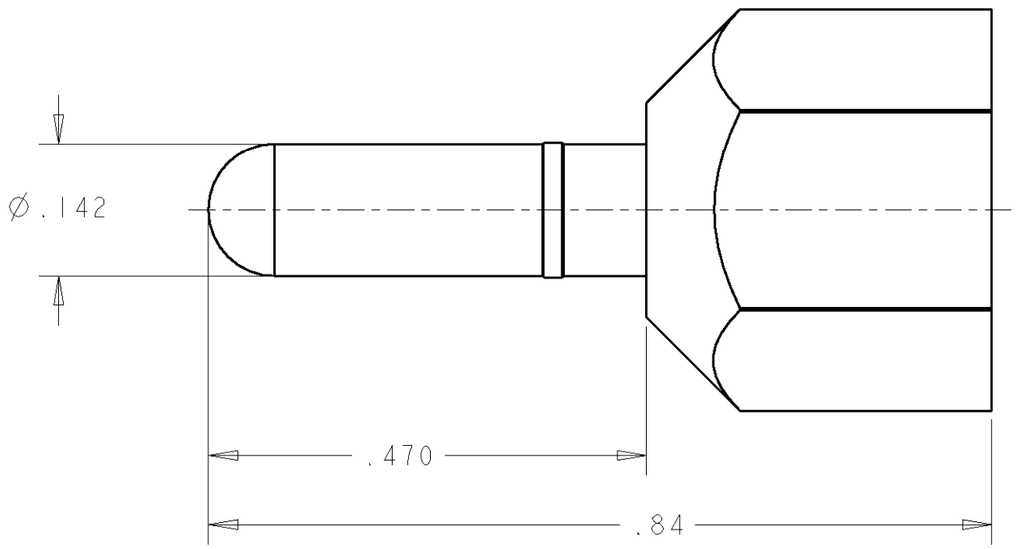

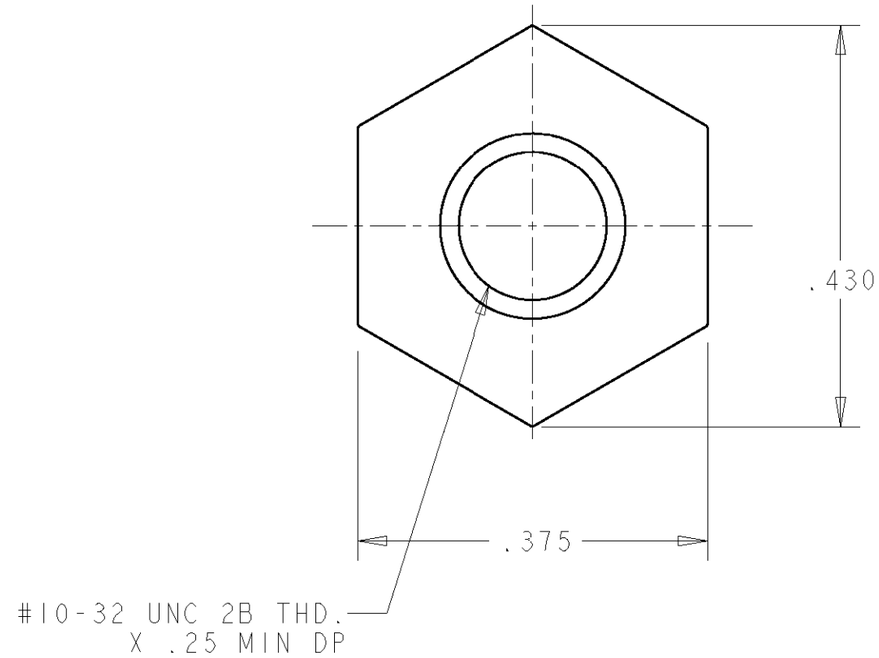

1. PART NUMBER CHANGES AND/OR DESIGN CHANGES AFFECTING ITEM INTERCHANGEABILITY REQUIRES PRIOR TYCO APPROVAL AND AUTHORIZATION BY REVISION TO THIS DRAWING.

2. MATERIAL:
   BRASS ALLOY

3. FINISH:
   SILVER PLATE .000200 MIN THK. OVER NICKEL
   .000040 MIN THK.

4. ITEMS PROVIDED TO THIS SPECIFICATION TO BE PERMANENTLY IDENTIFIED ON THE CONTAINER PER THE FOLLOWING IDENTIFIER:

TYCO PART NUMBER — XXXXXXX-X

DATE CODE (eg. 0216) — XXXX (YEAR, WEEK)

AS SHOWN	1766150-1
DESCRIPTION	PART NUMBER

THIS DRAWING IS A CONTROLLED DOCUMENT FOR TYCO ELECTRONICS CORPORATION. IT IS SUBJECT TO CHANGE AND THE CONTROLLING ENGINEERING ORGANIZATION SHOULD BE CONTACTED FOR THE LATEST REVISION.

DIMENSIONS: INCHES

TOLERANCES UNLESS OTHERWISE SPECIFIED:
0 PLC ±-
1 PLC ±-
2 PLC ±.02
3 PLC ±.010
4 PLC ±-
ANGLES ±-

MATERIAL -
FINISH -

DWN R.GRZYBOWSKI 01JUN2007
CHK D.ORRIS 01JUN2007
APVD S.FLICKINGER 01JUN2007
PRODUCT SPEC -
APPLICATION SPEC -
WEIGHT -

Tyco Electronics
Tyco Electronics
Harrisburg, PA 17105-3608

NAME CONTACT, PIN, SIZE No. 8
10-32 INT. THD. LOCKING
ICCON

SIZE	CAGE CODE	DRAWING NO	RESTRICTED TO
A3	00779	C-1766150	-

CUSTOMER DRAWING | SCALE 6:1 | SHEET 1 OF 1 | REV A

ELCON CONTACTS

AMP 1470-19 REV 31MAR2000

Pro/ENGINEER DRAWING