THIS DRAWING IS UNPUBLISHED. RELEASED FOR PUBLICATION -
© COPYRIGHT - ALL RIGHTS RESERVED.

LOC	DIST
A1	-

REVISIONS

P	LTR	DESCRIPTION	DATE	DWN	APVD
	A15	ECO-14-001563	27FEB2014	RK	MKO
	A16	ECR-14-013782	23SEP2014	RK	MKO
	A17	ECR-16-016696	24AUG2017	GCM	MKO
	A18	ECR-16-016780	15NOV2017	GR	MKO

PN 0-1.0-7 & 3-0

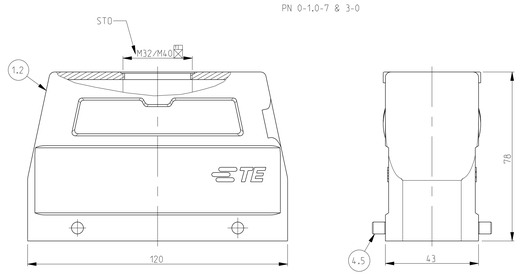

PN 0-4.1-9.2-1.4-0.3-9 & 1-0

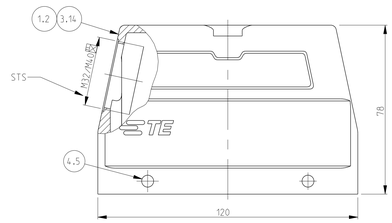

PN 1-1 & 0-8

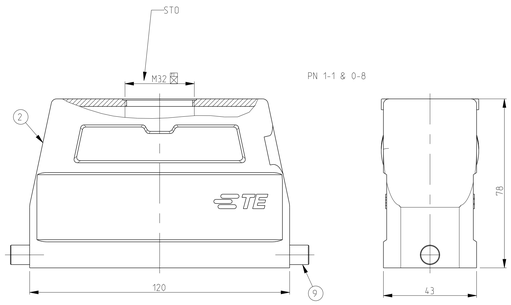

NOTES.

1 Material:Housing:Aluminium Diecasting Alloy

2 Surface:Varnish grey

3 Varnish on the inside not necessary

4 Packaging
Quantity 5 Pieces in a box

5 Without TE-Product sign

6 Special Packaging
Quantity 50 Pieces in a Kanban box

PN 0-3.0-6.0-9.1-2.3-1

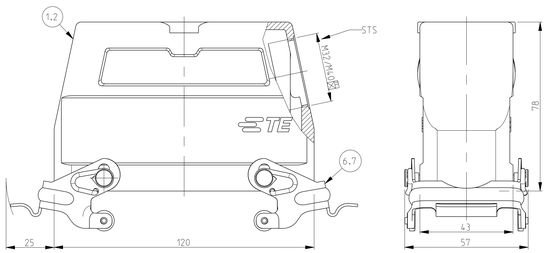

PN 0-2.0-5.2-0.3-5.3-6.3-7 & 3-8

PN 2-2 & 2-5

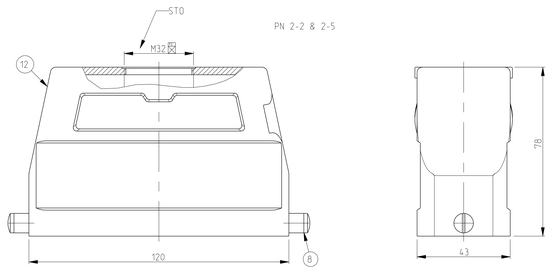

PN 2-7. 2-8

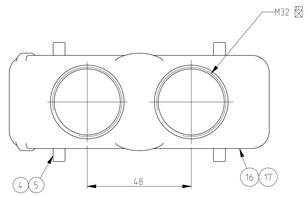

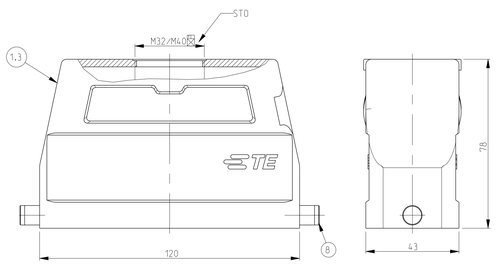

PN 2-3

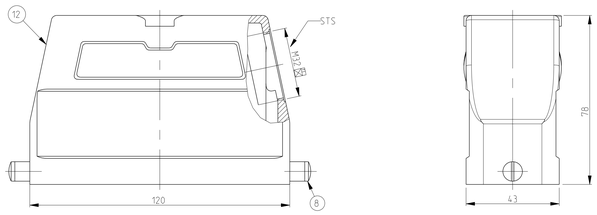

PN 1-6. 1-7. 1-8. 3-3. 3-4

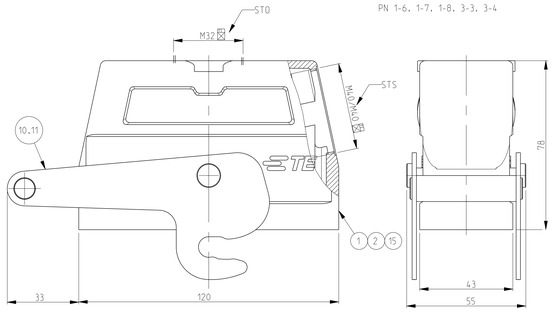

PN 2-4

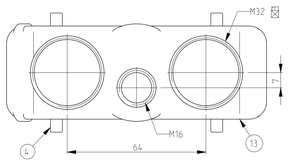

PN 3-2

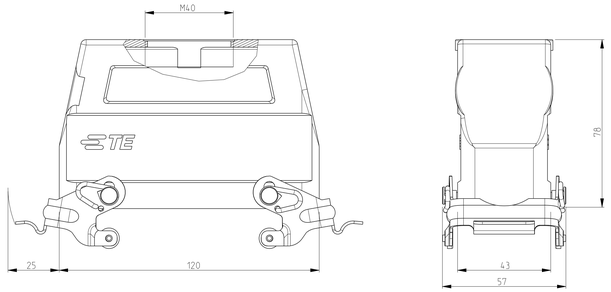

| | | |