THIS DRAWING IS UNPUBLISHED. RELEASED FOR PUBLICATION -,- .
© COPYRIGHT - By - ALL RIGHTS RESERVED.

REVISIONS					
P	LTR	DESCRIPTION	DATE	DWN	APVD
	A1	ECR-14-015049	13OCT2014	GSK	BvH
	A2	ECR-16-003945	16MAR2016	GSK	BvH

NOTES:
Tolerances cable lengths:

0m to 0.5m	+30mm
0.5m to 1.0m	+50mm
1.0m to 3.0m	+100mm
< 3.0m	+1.5%

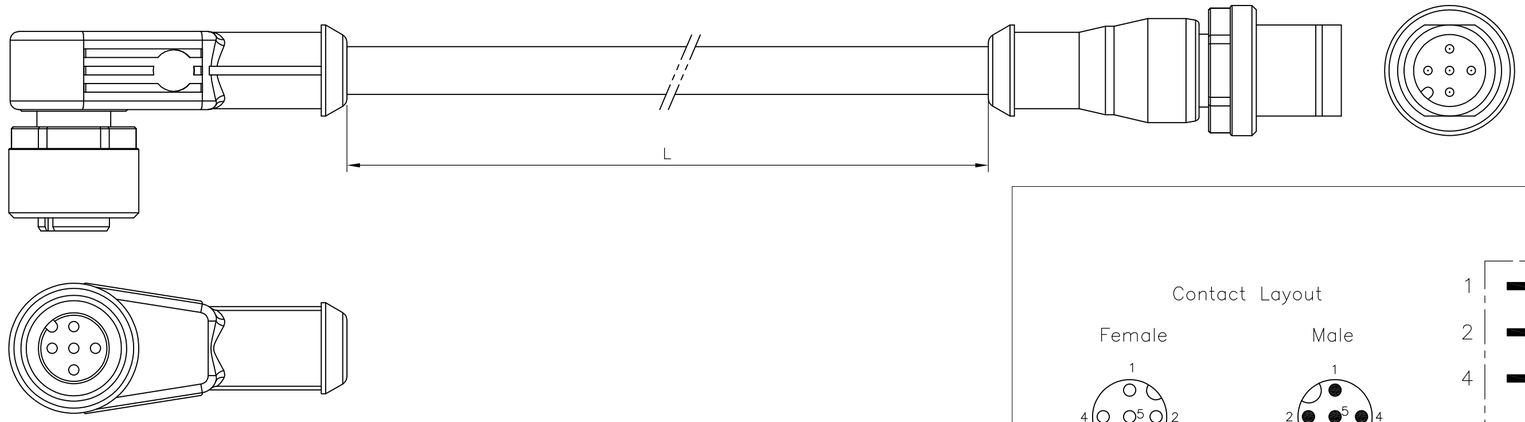

Schematic diagram

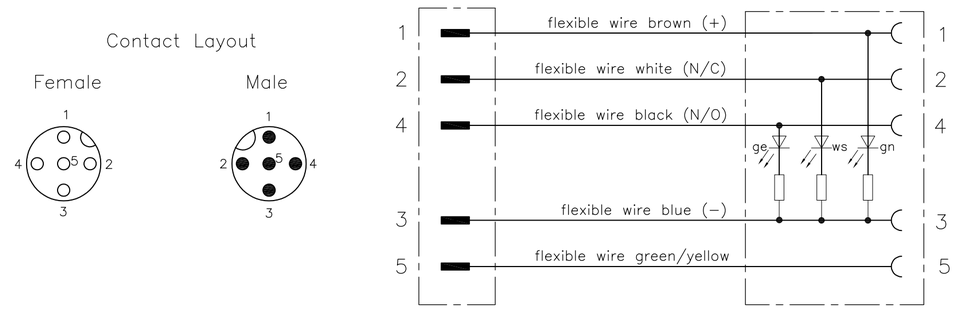

TECHNICAL DATA	
Operating voltage	24 V DC ±25 %
Operating current per contact	max. 4 A
Locking of ports	Screw thread M12 x 1 mm (recommended torque 0.6 Nm) self-securing
Protection	IP65 and IP67 when plugged and screwed down (EN 60529)

PUR/PVC CABLE	
No./diameter of wires	5 x 0.34 mm²
Wire isolation	PVC (br, wh, bl, bk, gnye)
C-track properties	2 million
Jacket	PUR/PVC
Outer diameter	approx. 5.9 mm
Bend radius (moving)	15 x outer diameter
Temperature range (fixed)	-30...+80 °C
Temperature range (mobile)	-5...+80 °C

CABLE	
No./diameter of wires	5 x 0.34 mm²
Wire isolation	PP (br, wh, bl, bk, gnye)
C-track properties	10 million
Jacket	PUR (UL/CSA), welding spark res.
Outer diameter	approx. 5.0 mm
Bend radius (moving)	10 x outer diameter
Temperature range (fixed)	-40...+90 °C
Temperature range (mobile)	-25...+90 °C

	LENGTH"L"	MATERIAL	JACKET COLOR	TE PN	DESCRIPTION	ITEM
5 pos	2.0mtr	SPARK RESISTANT	Black	3-2273127-5	5x22AWG SPARK RES 2.0m	20
	1.5mtr			3-2273127-4	5x22AWG SPARK RES 1.5m	19
	1.0mtr			3-2273127-3	5x22AWG SPARK RES 1.0m	18
	0.6mtr			3-2273127-2	5x22AWG SPARK RES 0.6m	17
	0.3mtr			3-2273127-1	5x22AWG SPARK RES 0.3m	16
5 pos	2.0mtr	PUR/PVC	Black	2-2273127-5	5x22AWG PUR/PVC 2.0m	15
	1.5mtr			2-2273127-4	5x22AWG PUR/PVC 1.5m	14
	1.0mtr			2-2273127-3	5x22AWG PUR/PVC 1.0m	13
	0.6mtr			2-2273127-2	5x22AWG PUR/PVC 0.6m	12
	0.3mtr			2-2273127-1	5x22AWG PUR/PVC 0.3m	11

2273127

TECHNICAL DATA	
Operating voltage	24 V DC ±25 %
Operating current per contact	max. 4 A
Locking of ports	Screw thread M12 x 1 mm (recommended torque 0.6 Nm) self-securing
Protection	IP65 and IP67 when plugged and screwed down (EN 60529)

PUR CABLE	
No./diameter of wires	5 x 0.34 mm²
Wire isolation	PP (br, wh, bl, bk, gnye)
C-track properties	5 million
Jacket	PUR (UL/CSA)
Outer diameter	approx. 5.0 mm
Bend radius (moving)	10 x outer diameter
Temperature range (fixed)	-40...+80 °C
Temperature range (mobile)	-25...+80 °C

PVC CABLE	
No./diameter of wires	5 x 0.34 mm²
Wire isolation	PVC (br, wh, bl, bk, gnye)
C-track properties	
Jacket	PVC (UL/CSA)
Outer diameter	approx. 5.2 mm
Bend radius (moving)	10 x outer diameter
Temperature range (fixed)	-30...+80 °C
Temperature range (mobile)	-5...+80 °C

	LENGTH"L"	MATERIAL	JACKET COLOR	TE PN	DESCRIPTION	ITEM
5 pos	2.0mtr	PVC	Black	1-2273127-5	5x22AWG PVC 2.0m	10
	1.5mtr			1-2273127-4	5x22AWG PVC 1.5m	9
	1.0mtr			1-2273127-3	5x22AWG PVC 1.0m	8
	0.6mtr			1-2273127-2	5x22AWG PVC 0.6m	7
	0.3mtr			1-2273127-1	5x22AWG PVC 0.3m	6
5 pos	2.0mtr	PUR	Black	2273127-5	5x22AWG PUR 2.0m	5
	1.5mtr			2273127-4	5x22AWG PUR 1.5m	4
	1.0mtr			2273127-3	5x22AWG PUR 1.0m	3
	0.6mtr			2273127-2	5x22AWG PUR 0.6m	2
	0.3mtr			2273127-1	5x22AWG PUR 0.3m	1

THIS DRAWING IS A CONTROLLED DOCUMENT.

DIMENSIONS: mm

TOLERANCES UNLESS OTHERWISE SPECIFIED:
0 PLC ± -
1 PLC ± -
2 PLC ± -
3 PLC ± -
4 PLC ± -
ANGLES ± -

MATERIAL -
FINISH -

DWN YATHISH.C 02DEC2013
CHK B.VELDHOVEN 02DEC2013
APVD A.VAN ZANDVOORT 02DEC2013
PRODUCT SPEC 108-19483
APPLICATION SPEC 114-32127
WEIGHT

TE Connectivity

NAME M12 ANGLD SCKT TO M12 STRGHT PLG 3 LED

SIZE A2 | CAGE CODE 00779 | DRAWING NO C-2273127 | RESTRICTED TO —

CUSTOMER DRAWING | SCALE NTS | SHEET 1 OF 1 | REV A2