THIS DRAWING IS UNPUBLISHED. RELEASED FOR PUBLICATION 20
© COPYRIGHT 20 BY - ALL RIGHTS RESERVED.

REVISIONS

P	LTR	DESCRIPTION	DATE	DWN	APVD
	A	INITIAL	10JUN2015	DW	CW
	A1	ECR-15-012067	10AUG2015	DW	CW

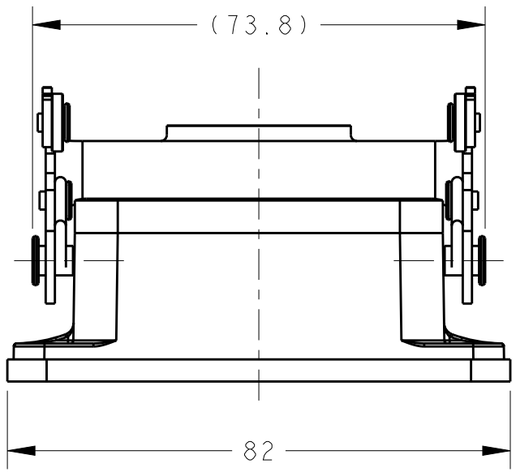

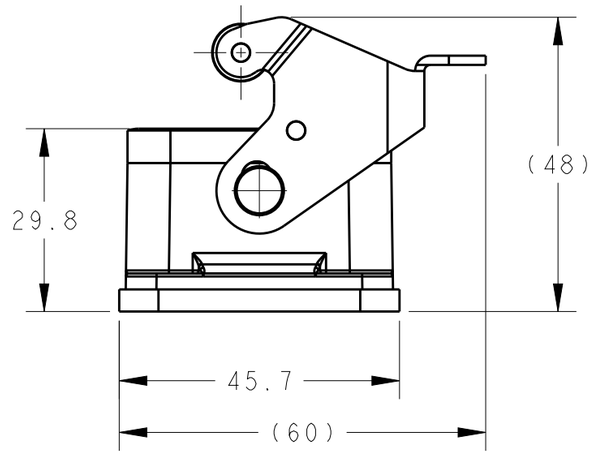

NOTES:
1. TECHNICAL CHARACTERISTICS:
   HOUSING MATERIAL: DIE CAST ALUMINIUM ALLOY
   SURFACE: POWDER COATED, GREY
   OPERATION TEMPERATURE: -40-+125°C
   DEGREE OF PROTECTION: IP65 (MATED)

注释:
1. 技术参数:
   下壳材料: 铝合金
   表面处理: 粉末涂层,灰色
   工作温度: -40-+125°C
   防护等级: IP65(配合)

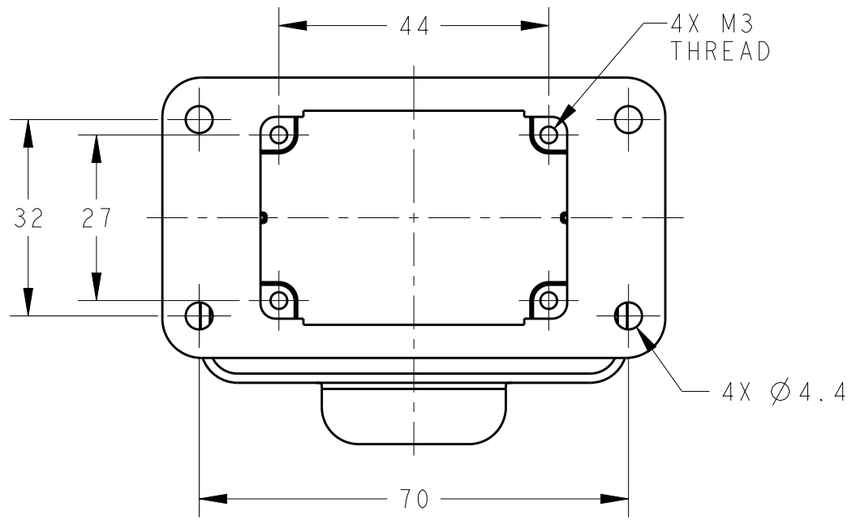

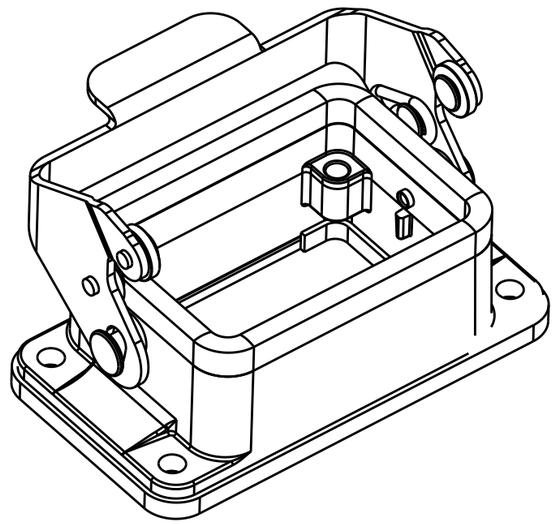

PANEL CUT OUT

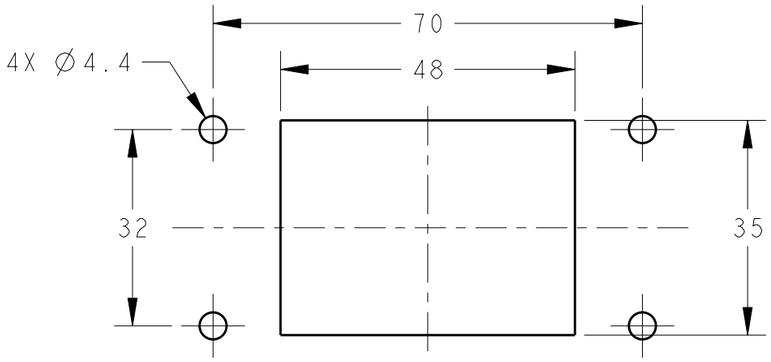

PART NUMBER	DESCRIPTION
T1500062000-000	H6B-AGS

THIS DRAWING IS A CONTROLLED DOCUMENT.

DIMENSIONS: mm

TOLERANCES UNLESS OTHERWISE SPECIFIED:
0 PLC ±-
1 PLC ±-
2 PLC ±-
3 PLC ±-
4 PLC ±-
ANGLES ±-

MATERIAL - -
FINISH - -

DWN David Wang 05JUN2015
CHK Chris Wang 05JUN2015
APVD Xiang Xu 05JUN2015
PRODUCT SPEC 108-137013
APPLICATION SPEC 114-137013
WEIGHT -

TE Connectivity

NAME H6B-AGS

SIZE	CAGE CODE	DRAWING NO	RESTRICTED TO
A3	00779	C-T1500062000000	-

Customer Drawing

SCALE 1:1 SHEET 1 OF 1 REV A1

1470-19 (3/13)