DATE	DESCRIPTION	REV.
8.12.11	AS PER ECN 11–104	A

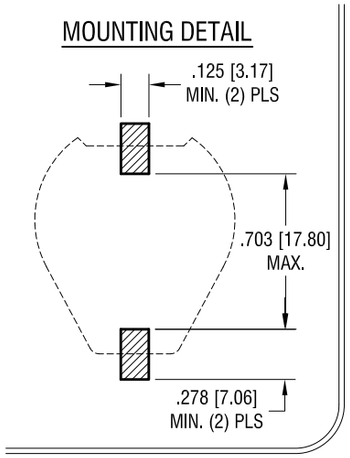

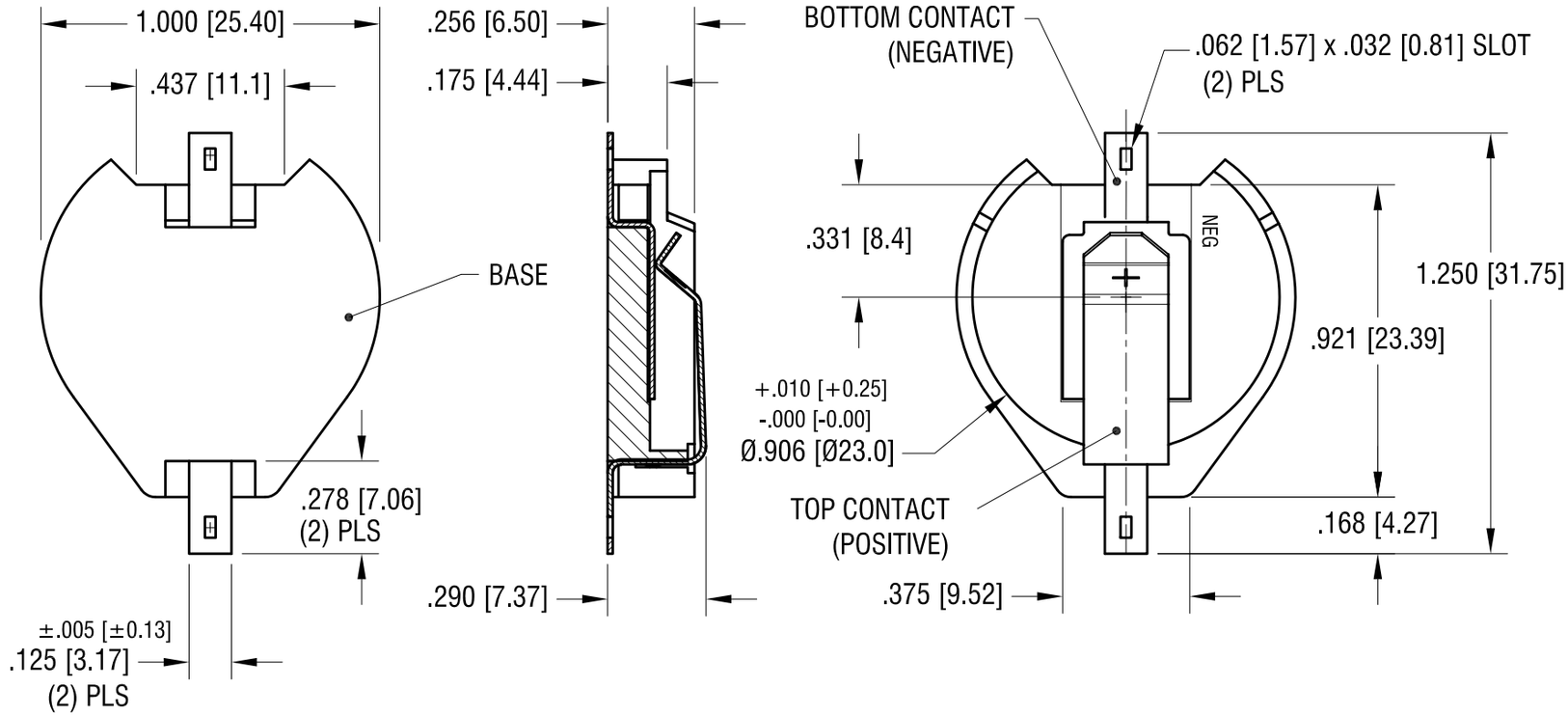

NOTES:

1. BASE:
   MAT'L - HIGH TEMPERATURE NYLON (UL 94V-0)
   COLOR BLACK
2. CONTACTS (TOP AND BOTTOM):
   MAT'L - .015 [0.38] TH'K SPRING STEEL
   FINISH: GOLD FLASH PLATE

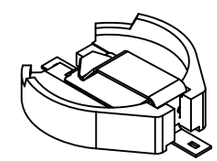

ACTUAL SIZE

THIS DOCUMENT IS THE PROPERTY OF KEYSTONE ELECTRONICS CORP. AND SHALL NOT BE REPRODUCED, DISTRIBUTED OR USED AS A BASIS FOR MANUFACTURE WITHOUT PRIOR WRITTEN PERMISSION FROM KEYSTONE ELECTRONICS CORP.

KEYSTONE ELECTRONICS CORP.

www.keyelco.com • ASTORIA, N.Y. 11105-2017 • Tel (718) 956-8900

PART NAME	DUAL 23mm BATTERY HOLDER, SMT		
MATERIAL	AS NOTED		
FINISH	AS NOTED	DRN BY NT	DATE 3.19.09
		APP'D LN	SCALE 2X
TOLERANCES INCH [MM] DECIMAL ± .010 [± 0.25] ANGULAR ± 1° UNLESS OTHERWISE SPECIFIED	CODE C	DWG NO. 1083	