THIS DRAWING IS UNPUBLISHED. RELEASED FOR PUBLICATION -,- .
© COPYRIGHT - TE Connectivity, SWINDON, UK ALL RIGHTS RESERVED.

LOC	DIST
—	—

REVISIONS

P	LTR	DESCRIPTION	DATE	DWN	APVD
	1	INITIAL DRAWING	24OCT2011	AFK	MA

LAYING DIAGRAM

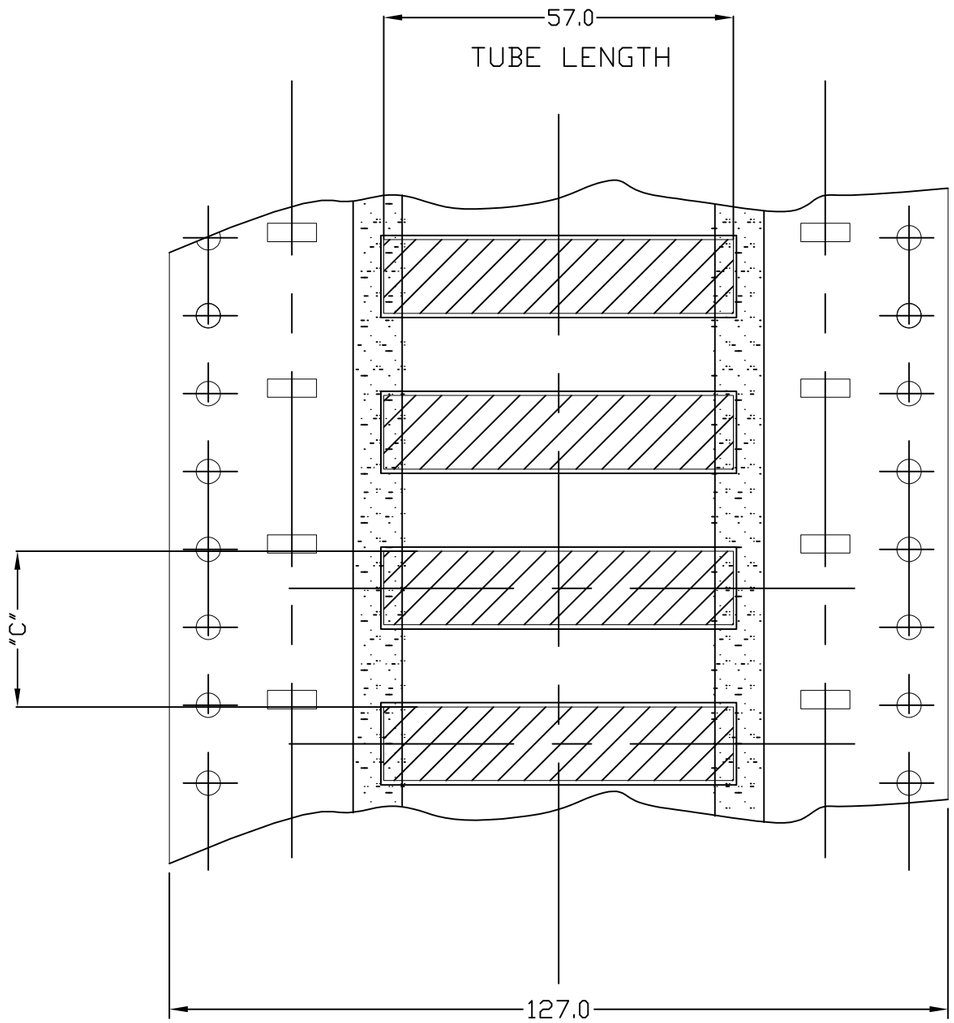

PRODUCT CODE (FIRST 5 DIGITS)	MATERIAL TUBE SPACING	
	No. TUBES AT "C" PITCH	"C" TUBE POSITION PITCH
HS024 / HC024	20	12.7
HS032 / HC030	20	12.7
HS048 / HC050	20	12.7
HS064 / HC060	10	25.4
HS095 / HC090	10	25.4
HS127 / HC120	5	50.8
HS190 / HC180	5	50.8
HS254 / HC240	5	50.8
HS381 / HC390	2	127

NOTES:-

1. NO ACCUMULATIVE PITCH ERROR THROUGH PACK IS ACCEPTABLE
2. PACKAGING AS REQUIRED

THIS DRAWING IS A CONTROLLED DOCUMENT.

DIMENSIONS: mm

TOLERANCES UNLESS OTHERWISE SPECIFIED:

0 PLC	± -
1 PLC	± -
2 PLC	± 0.25
3 PLC	± -
4 PLC	± -
ANGLES	± -

MATERIAL: IRRADIATED POLYOLEFIN

FINISH: -

DWN AFK 24OCT2011
CHK —
APVD —
PRODUCT SPEC —
APPLICATION SPEC —
WEIGHT —

TE Connectivity

NAME: HSI DOT MATRIX HS/HC DOUBLE SIDED NARROW ASSEMBLY (050)

SIZE A3 | CAGE CODE --- | DRAWING NO C-1900N0032 | RESTRICTED TO —

CUSTOMER DRAWING | SCALE --- | SHEET 1 OF 1 | REV 1

1470-19 (3/11)