MALE PCB PINS

PRINTED CIRCUIT PINS

3110/3111

311X-X-00-XX-00-00-08-0

Swage mount in .043 hole

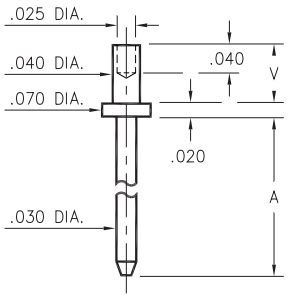

Basic Part Number	Board Thick-ness	Length A	Length V
3110-1	.031	.150	.051
3110-2	.062	.150	.082
3110-3	.094	.150	.113
3111-1	.031	.300	.051
3111-2	.062	.300	.082
3111-3	.094	.300	.113

3150

3150-X-00-XX-00-00-08-0

Swage mount in .043 mounting hole

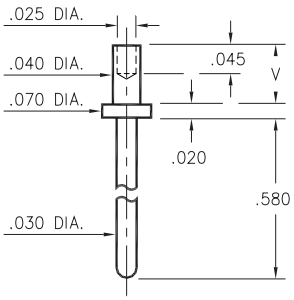

Basic Part Number	Board Thickness	Length V
3150-1	.031	.051
3150-2	.062	.082

3136/3137

313X-X-00-XX-00-00-08-0

Solder mount in .043 mounting hole

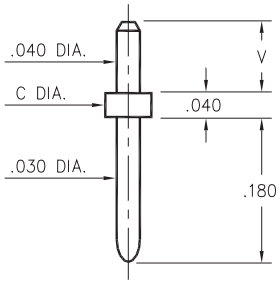

Basic Part Number	Board Thick-ness	Length V	Flange Dia. C
3136-1	.062	.082	.078
3136-2	.094	.110	
3136-3	.125	.145	
3137-1	.062	.082	.062
3137-2	.094	.110	
3137-3	.125	.145	
3137-4	.156	.185	

3148

3148-3-00-XX-00-00-08-0

Swage mount in .062 hole
For a .094 thick board

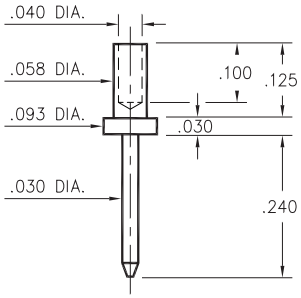

8815

8815-0-00-XX-00-00-03-0

Hex press-fit in .066 plated through-hole

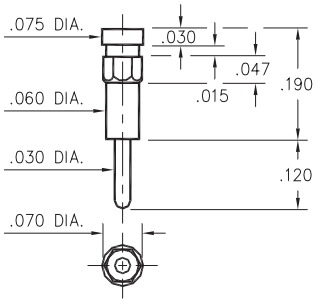

6821

6821-0-00-XX-00-00-08-0

Turret terminal pin

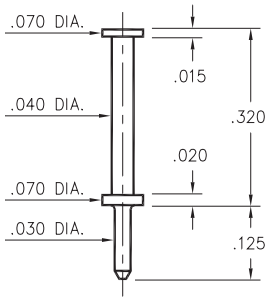

3132

3132-0-00-XX-00-00-08-0

Wire crimp termination, Annnealed
Accepts wire sizes 22 AWG Max. / 24 AWG Min.

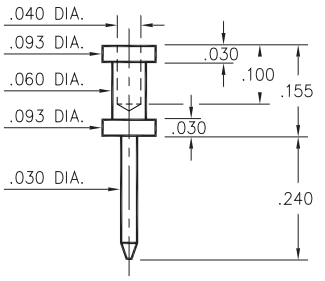

5601

5601-0-01-XX-00-00-03-0

Compliant press-fit in .040 ± .003 plated through-hole. For .060" →.100" thick board

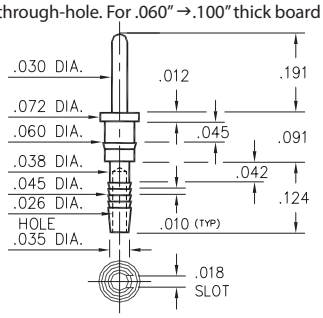

5602

5602-0-01-XX-00-00-03-0

Compliant press-fit in .040 ± .003 plated through-hole. For .090" →.130" thick board

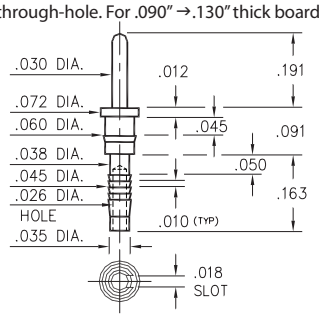

SPECIFICATIONS:

Pin Material: Brass Alloy 360, 1/2 Hard
(Except swage pins which are annealed)

Dimensions: Inches

Tolerances On: Lengths: ± .005
Diameters: ± .002
Angles: ± 2 °

RoHS-2 2011/65/EU

ORDER CODE: XXXX - X - 0X - XX - 00 - 00 - XX - 0

BASIC PART #

SPECIFY PIN FINISH:

- **01** 200 µ" TIN/LEAD OVER NICKEL
- ◆ **80** 200 µ" TIN OVER NICKEL (RoHS)
- ◆ **15** 10 µ" GOLD OVER NICKEL (RoHS)
- ◆ **21** 20 µ" GOLD OVER NICKEL (RoHS)
- ◆ **34** 50 µ" GOLD OVER NICKEL (RoHS)

MILL-MAX® Mill-Max Mfg. Corp. • 190 Pine Hollow Road, P.O. Box 300, Oyster Bay, NY 11771 • 516-922-6000 • Fax: 516-922-9253 • www.mill-max.com