THIS DRAWING IS UNPUBLISHED. RELEASED FOR PUBLICATION - ,- .
© COPYRIGHT - By - ALL RIGHTS RESERVED.

REVISIONS

P	LTR	DESCRIPTION	DATE	DWN	APVD
	L	REVISED PER ECO-17-012525	01SEP2017	SY	SY

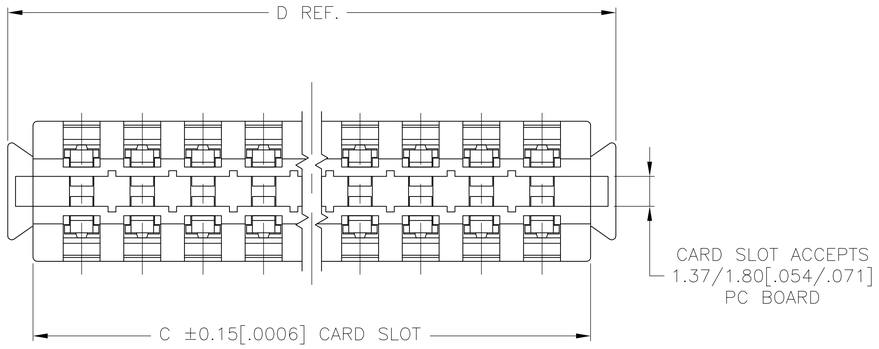

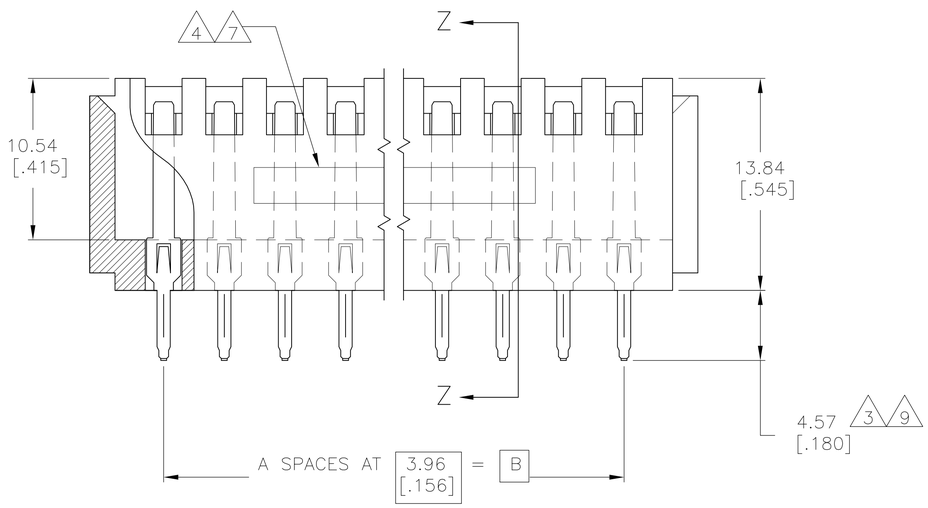

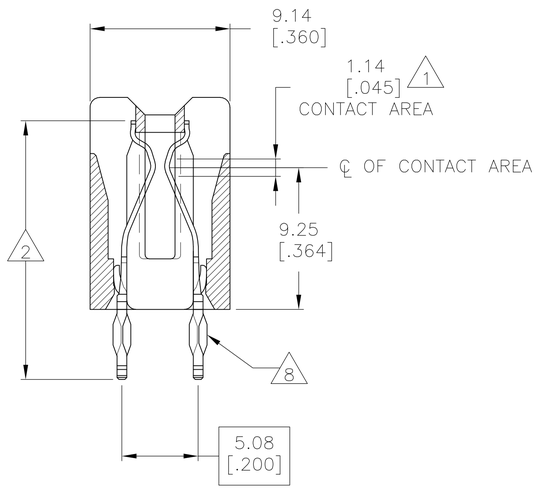

SECTION Z-Z

1. GOLD PLATE .00076 [.000030] MIN. THICK.
2. NICKEL PL. .00127[.000050] MIN. THK. PER QQ-N-290
3. SOLDER PL. .00254[.000100] MIN. THK.
4. STAMPED P/N & DATE CODE.
5. OPTIONAL: KEYING PLUG FOR INTERCONTACT KEYING IS 118982-1
6. OPTIONAL: CARD GUIDE (BASE NO 117169)
7. ALL PARTS ASSEMBLED IN CHINA MUST BE STAMPED "ASSY IN CHINA". THE WORD "CHINA" CAN BE SUBSTITUTED ONLY WHERE PART SIZE PROHIBITS STAMPING "ASSY IN CHINA", INK COLOR WHITE PER 115-9009, APPROX WHERE SHOWN, SIDE OPTIONAL.
8. ACTION PIN REQUIRES 2.13[.084] MIN. THK. PC BOARD.

REQUIRED HOLE DIAMETER TOLERANCES FOR COMPLIANT SECTION							
REQ'D DRILL SIZE	HOLE DIA ±.03[.001]	PLATING THICKNESS		HOLE DIAMETER		COPPER HARDNESS (KNOOP)	PAD DIA MIN.
		COPPER	TIN/LEAD	AFTER PLATING	AFTER REFLOW		
1.15mm	1.15 [.0453]	0.03-0.08 [.001-.003]	0.008 MIN. [.0003] MIN.	0.94-1.09 [.037-.043]	0.914-1.09 [.0036-.043]	150 MAX	1.57 [.062]
1.15mm	1.15 [.0453]	NOT PLATED THRU					1.65 [.065]

9. MATTE TIN PL. .00254[.000100] MIN. THK.
10. OBSOLETE PARTS: OBSOLETE CIS STREAMLINING PER D.RENAUD/D.SINISI

		D	C	B	A	POSN	PART NO.
9 10	OBSOLETE	~~177.65 [6.994]~~	~~174.35 [6.864]~~	~~166.42 [6.552]~~	~~42~~	~~43~~	~~7-119790-9~~
	9	118.21 [4.654]	114.91 [4.524]	106.98 [4.212]	27	28	6-119790-4
	9	94.44 [3.718]	91.13 [3.588]	83.21 [3.276]	21	22	5-119790-8
9 10	OBSOLETE	~~66.70 [2.626]~~	~~63.40 [2.496]~~	~~55.47 [2.184]~~	~~14~~	~~15~~	~~5-119790-1~~
	OBSOLETE	~~177.65 [6.994]~~	~~174.35 [6.864]~~	~~166.42 [6.552]~~	~~42~~	~~43~~	~~2-119790-9~~
		–	–	–	–	–	2-119790-8
		–	–	–	–	–	2-119790-7
	OBSOLETE	–	–	–	–	–	~~2-119790-6~~
		–	–	–	–	–	2-119790-5
		–	–	–	–	–	2-119790-4
		–	–	–	–	–	2-119790-3
	OBSOLETE	~~149.91 [5.702]~~	~~146.61 [5.772]~~	~~138.68 [5.468]~~	~~35~~	~~36~~	~~2-119790-2~~
		–	–	–	–	–	2-119790-1
		–	–	–	–	–	2-119790-0
		–	–	–	–	–	1-119790-9
		–	–	–	–	–	1-119790-8
		–	–	–	–	–	1-119790-7
		–	–	–	–	–	1-119790-6
		–	–	–	–	–	1-119790-5
		118.21 [4.654]	114.91 [4.524]	106.98 [4.212]	27	28	1-119790-4
	OBSOLETE	~~114.25 [4.498]~~	~~110.95 [4.368]~~	~~103.02 [4.056]~~	~~26~~	~~27~~	~~1-119790-3~~
		–	–	–	–	–	1-119790-2
		–	–	–	–	–	1-119790-1
	OBSOLETE	~~102.36 [4.030]~~	~~99.06 [3.900]~~	~~91.13 [3.588]~~	~~23~~	~~24~~	~~1-119790-0~~
		–	–	–	–	–	119790-9
	OBSOLETE	~~94.44 [3.718]~~	~~91.13 [3.588]~~	~~83.21 [3.276]~~	~~21~~	~~22~~	~~119790-8~~
		–	–	–	–	–	119790-7
		–	–	–	–	–	119790-6
		–	–	–	–	–	119790-5
	OBSOLETE	–	–	–	–	–	~~119790-4~~
		–	–	–	–	–	119790-3
		–	–	–	–	–	119790-2
10	OBSOLETE	~~66.70 [2.626]~~	~~63.40 [2.496]~~	~~55.47 [2.184]~~	~~14~~	~~15~~	~~119790-1~~

THIS DRAWING IS A CONTROLLED DOCUMENT.

DIMENSIONS: mm [INCHES]

TOLERANCES UNLESS OTHERWISE SPECIFIED:
0 PLC ± –
1 PLC ± –
2 PLC ± –
3 PLC ± 0.25[.010]
4 PLC ± –
ANGLES ± –

MATERIAL: HOUSING: VALOX, 420 SEQ,BLACK; CONTACTS: COPPER NICKEL

FINISH – 1 2 3 9

DWN R.L. LEHR 10-FEB-93
CHK H. ROSE 7/8/94
APVD H. ROSE 7/8/94
PRODUCT SPEC —
APPLICATION SPEC —
WEIGHT 0.000000
CUSTOMER DRAWING

TE Connectivity

NAME CONNECTOR, AMP PACE .156 X .200 – –

SIZE A1 | CAGE CODE 00779 | DRAWING NO C-119790 | RESTRICTED TO —

SCALE 4:1 | SHEET 1 OF 1 | REV L

4805 (1/15)