REV.	DATE	ECR NO.	DESCRIPTION
A	07/21/10	--	RELEASE TO MFG.

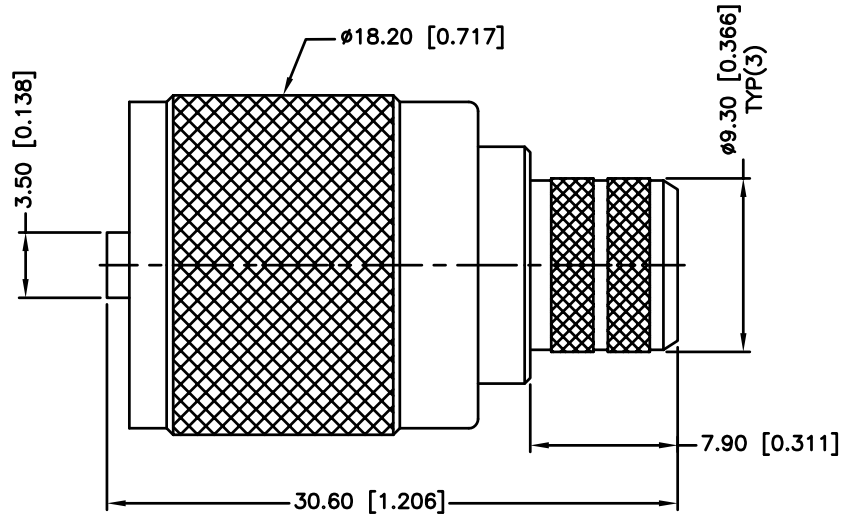

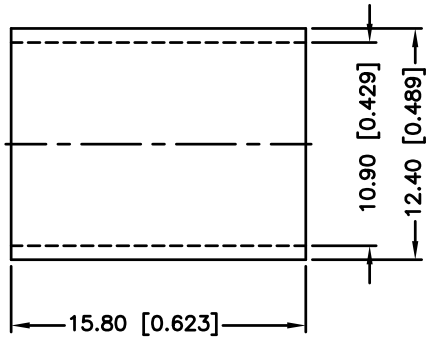

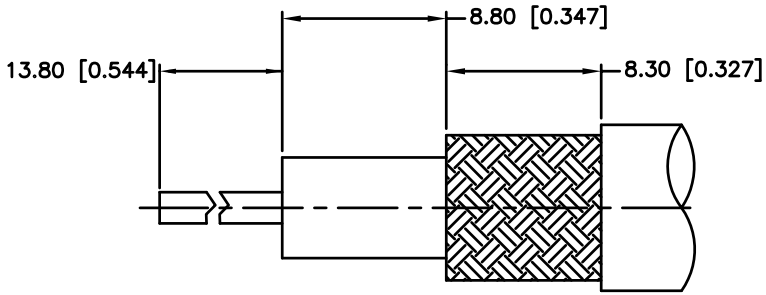

RECOMMENDED CABLE
STRIPPING DIM'S

NOTE:

1. CRIMPED FERRULE
   HEX CRIMP SIZE 0.429"[10.90]
2. CRIMPED CONTACT PIN
   HEX CRIMP SIZE 0.118"[3.00]

	DESCRIPTION	MATERIAL	FINISH	QTY
8				
7				
6				
5	FERRULE	COPPER	NICKEL	1
4	CONTACT PIN	BRASS	SILVER	1
3	INSULATOR	PTFE	NATURAL	1
2	COUPLING NUT	BRASS	SILVER	1
1	BODY	BRASS	SILVER	1

UNLESS OTHERWISE SPECIFIED DIMENSIONS ARE IN MILLIMETERS. DIMENSIONS IN [ ] ARE IN INCHES AND FOR CUSTOMER REFERANCE ONLY.

UNLESS OTHERWISE SPECIFIED TOLERANCES FOR MILLIMETERS ARE:
0.5 – 8mm ± 0.20mm
8 – 30mm ± 0.40mm
30 – 120mm ± 0.50mm

UNLESS OTHERWISE SPECIFIED TOLERANCES FOR INCHES ARE:
.020 – .315 = ± 0.007"
.315 – 1.180 = ± 0.015"
1.180 – 4.724 = ± 0.020"

DO NOT SCALE DRAWING

APPROVALS		DATE
DRAWN	CLEMENT	07/21/10
CHECKED		
ISSUED		
SHEET	1 OF 1	

CAD FILE C:/182/182130-10.DWG

Amphenol Connex

PART DESCRIPTION
UHF CRIMP PLUG
(FOR BELDEN 8214, 9913, 9914, LMR400 CABLE)

PART NO. 182130-10

DWG. NO. 182130-10.DWG | REV. A | SIZE A | SCALE NA