THIS DRAWING IS UNPUBLISHED. RELEASED FOR PUBLICATION -,- .
© COPYRIGHT - BY TYCO ELECTRONICS CORPORATION. ALL RIGHTS RESERVED.

LOC	DIST
ES	00

REVISIONS

P	LTR	DESCRIPTION	DATE	DWN	APVD
	E	ECR-12-008098	08MAY2012	WC	AC

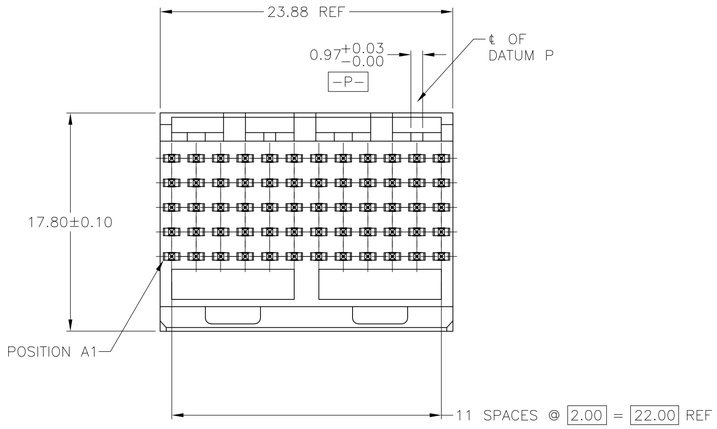

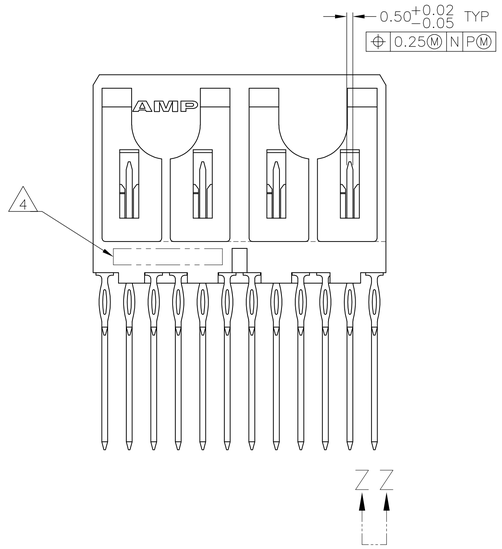

5223081-1 AS SHOWN

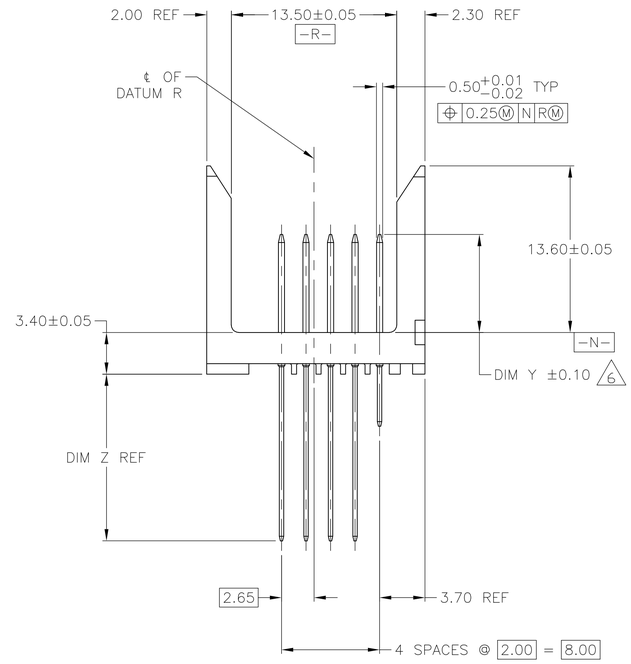

1. HOUSING MATERIAL: LIQUID CRYSTAL POLYMER, NATURAL.
2. CONTACT MATERIAL: PHOSPHOR BRONZE.
3. CONTACT FINISH:
   UNDERPLATE (ENTIRE CONTACT):
   0.00127 MIN NICKEL PER SAE-AMS-QQ-N-290
   ON MATING SURFACES:
   CONFORMS TO ALL TESTING SPECIFIED FOR TELCORDIA UNCONTROLLED ENVIRONMENT.
   ON LEADS:
   0.0006 MIN MATTE TIN PER ASTM B 545 OVER UNDERPLATE.
   LUBRICATION (MIN MATING SURFACES):
   SURFACE CONDITIONER AFTER PLATING.
4. PART MARKING, LOCATED APPROXIMATELY AS SHOWN.
5. SEE SHEET 2 FOR SEQUENCING CHARTS.
6. DIMENSION APPLIES WHEN SEATED ON PRINTED CIRCUIT BOARD.
7. SEE RESTRICTED CUSTOMER DRAWING.

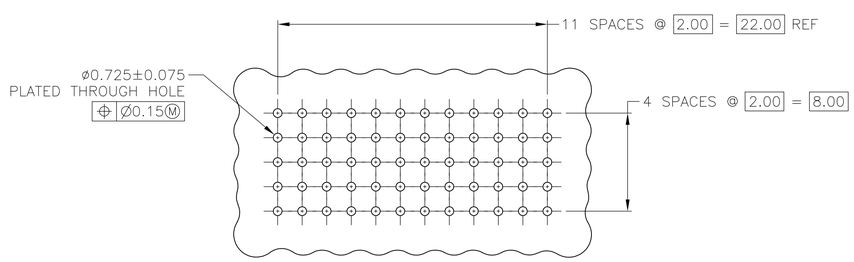

RECOMMENDED CIRCUIT PATTERN
(COMPONENT SIDE)

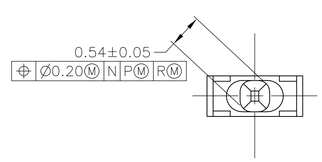

VIEW Z-Z
SCALE 20:1

	PART NUMBER
	6-5223081-0
	5-5223081-9
OBSOLETE	5-5223081-8
	5-5223081-7
OBSOLETE	5-5223081-6
OBSOLETE	5-5223081-0
OBSOLETE	4-5223081-9
	4-5223081-8
OBSOLETE	4-5223081-6
SUPERCEDED BY 4-1705989-3	4-5223081-3
	3-5223081-5
OBSOLETE	3-5223081-2
	3-5223081-1
OBSOLETE	3-5223081-0
OBSOLETE	2-5223081-9
OBSOLETE	2-5223081-8
OBSOLETE	2-5223081-6
	2-5223081-4
OBSOLETE	1-5223081-2
OBSOLETE	1-5223081-1
OBSOLETE	1-5223081-0
OBSOLETE	5223081-9
	7 5223081-8
OBSOLETE	5223081-7
OBSOLETE	5223081-6
OBSOLETE	5223081-5
OBSOLETE	5223081-4
	5223081-3
	5223081-2
OBSOLETE	5223081-1

THIS DRAWING IS A CONTROLLED DOCUMENT.

DIMENSIONS: mm

TOLERANCES UNLESS OTHERWISE SPECIFIED:
0 PLC ± –
1 PLC ± –
2 PLC ± 0.13
3 PLC ± –
4 PLC ± –
ANGLES ± –

MATERIAL 1 2
FINISH 3

DWN B.MCMASTER 13DEC04
CHK R.WERTZ 13DEC04
APVD R.WERTZ 13DEC04
PRODUCT SPEC —
APPLICATION SPEC —
WEIGHT —

Tyco Electronics
Tyco Electronics Corporation
Shanghai, P.R.China, 200233

NAME
PIN ASSEMBLY, Z-PACK 2mm FB, SIGNAL, VERTICAL, 5 ROW, 60 POSITION, PRESS FIT LEADS, W/SEQUENCING

SIZE	CAGE CODE	DRAWING NO	RESTRICTED TO
A1	00779	C-5223081	—

CUSTOMER DRAWING
SCALE 4:1 SHEET 1 OF 2 REV E

THIS DRAWING IS UNPUBLISHED. RELEASED FOR PUBLICATION -,- .
© COPYRIGHT - BY TYCO ELECTRONICS CORPORATION. ALL RIGHTS RESERVED.

LOC	DIST
ES	00

REVISIONS

P	LTR	DESCRIPTION	DATE	DWN	APVD
	—	SEE SHEET 1	—	—	—

E	E	E	E	E	E	E	E	E	E	E	E	E	
D	UU	UU	UU	UU	UU	UU	UU	UU	UU	UU	UU	UU	D
C	UU	UU	UU	UU	UU	UU	UU	UU	UU	UU	UU	UU	C
B	UU	UU	UU	UU	UU	UU	UU	UU	UU	UU	UU	UU	B
A	UU	UU	UU	UU	UU	UU	UU	UU	UU	UU	UU	UU	A
ROW	1	2	3	4	5	6	7	8	9	10	11	12	ROW

CONTACT LOAD CHART

5223081–1

PART NUMBER

E	E	E	E	E	E	E	E	E	E	E	E	E	
D	E	E	E	E	E	E	E	E	E	E	E	E	D
C	E	E	E	E	E	E	E	E	E	E	E	E	C
B	E	E	E	E	E	E	E	E	E	E	E	E	B
A	E	E	E	E	E	E	E	E	E	E	E	E	A
ROW	1	2	3	4	5	6	7	8	9	10	11	12	ROW

CONTACT LOAD CHART

5223081–2

PART NUMBER

E	N	E	E	E	E	E	E	E	E	E	E	E	
D	E	E	E	E	E	E	E	E	E	E	E	E	D
C	T	T	T	E	E	T	E	E	E	E	E	E	C
B	E	E	E	E	E	N	E	E	E	E	E	E	B
A	N	E	E	E	E	N	E	E	E	E	E	E	A
ROW	1	2	3	4	5	6	7	8	9	10	11	12	ROW

CONTACT LOAD CHART

5223081–3

PART NUMBER

E		A	A							A	A	E	
D		A	A							A	A	D	
C												C	
B		A	A			A		A	A		A	B	
A		A	A			A		A	A		A	A	
ROW	1	2	3	4	5	6	7	8	9	10	11	12	ROW

CONTACT LOAD CHART

5223081–4
OBSOLETE

PART NUMBER

E	A	A	A	A	A	A	A	A	A	A	A	E	
D	A	A	A	A	A	A	A	A	A	A	A	D	
C	A	A	A	A	A	A	A	A	A	A	A	C	
B	A	A	A	A	A	A	A	A	A	A	A	B	
A	A	A	A	A	A	A	A	A	A	A	A	A	
ROW	1	2	3	4	5	6	7	8	9	10	11	12	ROW

CONTACT LOAD CHART

5223081–5

PART NUMBER

E	J	J	J	J	J	J	A	J	J	J	J	E	
D	J	J	J	J	J	J	J	J	J	J	J	D	
C	J	J	J	J	J	J	J	J	J	J	J	C	
B	J	J	J	J	J	J	J	J	J	J	J	B	
A	J	J	J	J	J	J	J	J	J	J	J	A	
ROW	1	2	3	4	5	6	7	8	9	10	11	12	ROW

CONTACT LOAD CHART

5223081–6

PART NUMBER

E	J	J	J	J	J	J	J	J	J	J	J	E	
D	T	T	T	T	T	T	T	T	T	T	T	D	
C	J	J	J	J	J	J	J	J	J	J	J	C	
B	J	J	J	J	J	J	J	J	J	J	J	B	
A	A	A	A	A	A	A	A	A	A	A	A	A	
ROW	1	2	3	4	5	6	7	8	9	10	11	12	ROW

CONTACT LOAD CHART

5223081–7

PART NUMBER

E	E	E	E	E	E	E	E	E	E	E	E	E	
D	E	E	E	E	E	E	E	E	E	E	E	E	D
C	E	E	E	E	E	E	E	E	E	E	E	E	C
B	E	E	E	E	E	E	E	E	E	E	E	E	B
A	E	E	E	E	E	E	E	E	E	E	E	E	A
ROW	1	2	3	4	5	6	7	8	9	10	11	12	ROW

CONTACT LOAD CHART

5223081–8

PART NUMBER

E		E		E		E		E		E		E	
D			E		E		E		E		E		D
C	E		E		E		E		E		E		C
B		E		E		E		E		E		E	B
A	E		E		E		E		E		E		A
ROW	1	2	3	4	5	6	7	8	9	10	11	12	ROW

CONTACT LOAD CHART

2–5223081–4

PART NUMBER

E	T	A	E	E	A	E	E	E	E	E	T	E	
D	A	E	E	E	E	E	E	E	E	E	T	D	
C	E	E	E	E	E	E	E	E	E	E	T	C	
B	T	E	E	E	E	E	E	E	E	E	T	B	
A	A	A	E	E	E	E	E	E	E	E	T	A	
ROW	1	2	3	4	5	6	7	8	9	10	11	12	ROW

CONTACT LOAD CHART

2–5223081–6
OBSOLETE

PART NUMBER

E	E	E	E	E	A	A	A	A	E	E	E	E	
D	E	E	E	E	E	E	E	E	E	E	E	D	
C	E	E	E	E	E	E	E	E	E	E	E	C	
B	E	E	E	E	E	E	E	E	E	E	E	B	
A	E	E	E	E	E	E	E	E	E	E	E	A	
ROW	1	2	3	4	5	6	7	8	9	10	11	12	ROW

CONTACT LOAD CHART

2–5223081–8
OBSOLETE

PART NUMBER

E	UU	UU	UU	UU	UU	UU	UU	UU	UU	UU	UU	UU	E
D	UU	UU	UU	UU	UU	UU	UU	UU	UU	UU	UU	UU	D
C	UU	UU	UU	UU	UU	UU	UU	UU	UU	UU	UU	UU	C
B	UU	UU	UU	UU	UU	UU	UU	UU	UU	UU	UU	UU	B
A	UU	UU	UU	UU	UU	UU	UU	UU	UU	UU	UU	UU	A
ROW	1	2	3	4	5	6	7	8	9	10	11	12	ROW

CONTACT LOAD CHART

2–5223081–9
OBSOLETE

PART NUMBER

E													
D													
C													
B													
A													
ROW	1	2	3	4	5	6	7	8	9	10	11	12	ROW

CONTACT LOAD CHART

SUPERCEDED
BY
4–1705989–3

4–5223081–3

PART NUMBER

E	A	A	A	A	A	A	A	A	A	A	A	E	
D	J	J	J	J	J	J	J	J	J	J	J	D	
C	T	T	T	T	T	T	T	T	T	T	T	C	
B	J	J	J	J	J	J	J	J	J	J	J	B	
A	A	A	A	A	A	A	A	A	A	A	A	A	
ROW	1	2	3	4	5	6	7	8	9	10	11	12	ROW

CONTACT LOAD CHART

4–5223081–6

PART NUMBER

E	E		E		E		E		E		E		E
D		E		E		E		E		E		E	D
C	E		E		E		E		E		E		C
B		E		E		E		E		E		E	B
A	E		E		E		E		E		E		A
ROW	1	2	3	4	5	6	7	8	9	10	11	12	ROW

CONTACT LOAD CHART

4–5223081–8

PART NUMBER

E		GGGG		GGGG		GGGG		GGGG		E			
D		GGGG		GGGG		GGGG		GGGG		D			
C		GGGG		GGGG		GGGG		GGGG		C			
B		GGGG		GGGG		GGGG		GGGG		B			
A		GGGG		GGGG		GGGG		GGGG		A			
ROW	1	2	3	4	5	6	7	8	9	10	11	12	ROW

CONTACT LOAD CHART

4–5223081–9

PART NUMBER

E		A	A		A	A		A	A		A	A	E
D		A	A		A	A		A	A		A	A	D
C		A	A		A	A		A	A		A	A	C
B		A	A		A	A		A	A		A	A	B
A		A	A		A	A		A	A		A	A	A
ROW	1	2	3	4	5	6	7	8	9	10	11	12	ROW

CONTACT LOAD CHART

5–5223081–0

PART NUMBER

E		E		E		E		E		E		E	
D	E		E		E		E		E		E		D
C		E		E		E		E		E		E	C
B	E		E		E		E		E		E		B
A		E		E		E		E		E		E	A
ROW	1	2	3	4	5	6	7	8	9	10	11	12	ROW

CONTACT LOAD CHART

3–5223081–1

PART NUMBER

E	E	E	E	E	E	E	E	E	E	E	E	E	
D	N	E	E	N	E	E	N	J	J	A	J	J	D
C	E	E	N	E	E	N	J	J	N	J	J	J	C
B	E	N	E	E	N	J	J	N	J	J	J	J	B
A	E	E	E	E	E	E	E	E	E	E	E	J	A
ROW	1	2	3	4	5	6	7	8	9	10	11	12	ROW

CONTACT LOAD CHART

3–5223081–2

PART NUMBER

			N	N	N	N	N	N	N			E	
			N	N	N	N	E	E	N			D	
			N	E	E	N	N	N	N			C	
			N	N	N	N	E	E	N			B	
			N	N	N	N	N	N	N			A	
ROW	1	2	3	4	5	6	7	8	9	10	11	12	ROW

CONTACT LOAD CHART

3–5223081–5

PART NUMBER

E													
D													
C													
B													
A													
ROW	1	2	3	4	5	6	7	8	9	10	11	12	ROW

CONTACT LOAD CHART

E	A	J	J	J	J	J	J	J	J	J	J	J	E
D	J	J	J	J	J	J	J	J	J	J	J	J	D
C	J	J	J	J	J	J	J	J	J	J	J	J	C
B	J	J	J	J	J	J	J	J	J	J	J	J	B
A	J	J	J	J	J	J	J	J	J	J	J	J	A
ROW	1	2	3	4	5	6	7	8	9	10	11	12	ROW

CONTACT LOAD CHART

1–5223081–2

PART NUMBER

E	E	E	E	E	E	W	W	W	W	W	W	W	E
D	E	E	E	E	E	E	W	W	W	W	W	W	D
C	E	E	E	E	E	E	W	W	W	W	W	W	C
B	E	E	E	E	E	E	W	W	W	W	W	W	B
A	E	E	E	E	E	E	W	W	W	W	W	W	A
ROW	1	2	3	4	5	6	7	8	9	10	11	12	ROW

CONTACT LOAD CHART

1–5223081–1

PART NUMBER

E													
D													
C													
B													
A													
ROW	1	2	3	4	5	6	7	8	9	10	11	12	ROW

CONTACT LOAD CHART

1–5223081–0

PART NUMBER

E	G	G	G	G	G	G	G	G	G	G	G	E	
D	G	G	G	G	G	G	G	G	G	G	G	D	
C	G	R	G	G	G	G	G	G	G	G	G	C	
B	G	G	G	G	G	G	G	G	G	G	G	B	
A	G	G	G	G	G	G	G	G	G	G	G	A	
ROW	1	2	3	4	5	6	7	8	9	10	11	12	ROW

CONTACT LOAD CHART

5–5223081–6
OBSOLETE

PART NUMBER

E	E	E	E	E	E	E	E	E	E	N	N	E	
D	E	E	E	E	E	E	E	E	E	E	E	D	
C	E	E	E	E	E	E	T	T	T	T	T	C	
B	E	E	E	E	E	E	E	E	E	E	E	B	
A	E	E	E	E	E	E	E	E	E	N	N	A	
ROW	1	2	3	4	5	6	7	8	9	10	11	12	ROW

CONTACT LOAD CHART

5–5223081–7

PART NUMBER

E	N	E	E	E	E	E	E	E	E	E	E	E	
D	E	E	E	E	E	E	E	E	E	E	E	D	
C	T	E	E	E	T	T	T	E	E	E	E	C	
B	E	E	E	E	E	E	E	E	E	E	E	B	
A	N	E	E	E	E	E	E	E	E	E	E	A	
ROW	1	2	3	4	5	6	7	8	9	10	11	12	ROW

CONTACT LOAD CHART

5–5223081–8

PART NUMBER

E	N	E	E	E	E	E	E	E	E	E	E	E	
D	E	E	E	E	E	E	E	E	E	E	E	D	
C	T	E	E	T	T	E	T	E	E	E	E	C	
B	E	E	E	E	E	E	E	E	E	E	E	B	
A	N	E	E	E	T	E	E	E	E	E	E	A	
ROW	1	2	3	4	5	6	7	8	9	10	11	12	ROW

CONTACT LOAD CHART

5–5223081–9

PART NUMBER

E	E	E	E	E	E	E	E	E	E	E	E	E	
D	E	E	E	E	E	E	E	E	E	E	E	D	
C	N	E	E	E	E	E	N	E	E	E	E	C	
B	E	E	E	E	E	E	E	E	E	E	E	B	
A	E	E	E	E	E	E	E	E	E	E	E	A	
ROW	1	2	3	4	5	6	7	8	9	10	11	12	ROW

CONTACT LOAD CHART

6–5223081–0

PART NUMBER

R 3	7.25	15.60
G 3	5.75	15.60
GG 3	5.00	13.60
WW 3	5.75	14.90
J 3	6.50	4.25
A 3	5.00	4.25
T 3	8.00	4.25
N 3	7.25	4.25
UU 3	5.75	13.60
E 3	5.75	4.25
CONTACT LETTER	DIM Y	DIM Z

THIS DRAWING IS A CONTROLLED DOCUMENT.

DIMENSIONS: mm

TOLERANCES UNLESS OTHERWISE SPECIFIED:
0 PLC ± –
1 PLC ± –
2 PLC ± 0.13
3 PLC ± –
4 PLC ± –
ANGLES ± –

MATERIAL 1 2

FINISH 3

DWN	B.MCMASTER	13DEC04
CHK	R.WERTZ	13DEC04
APVD	R.WERTZ	13DEC04
PRODUCT SPEC	—	
APPLICATION SPEC	—	
WEIGHT	—	

Tyco Electronics

Tyco Electronics Corporation
Shanghai, P.R.China, 200233

NAME: PIN ASSEMBLY, Z–PACK 2mm FB, SIGNAL, VERTICAL, 5 ROW, 60 POSITION, PRESS FIT LEADS, W/SEQUENCING

SIZE	CAGE CODE	DRAWING NO	RESTRICTED TO
A1	00779	C–5223081	—

CUSTOMER DRAWING

SCALE	SHEET	REV
4:1	2 OF 2	E