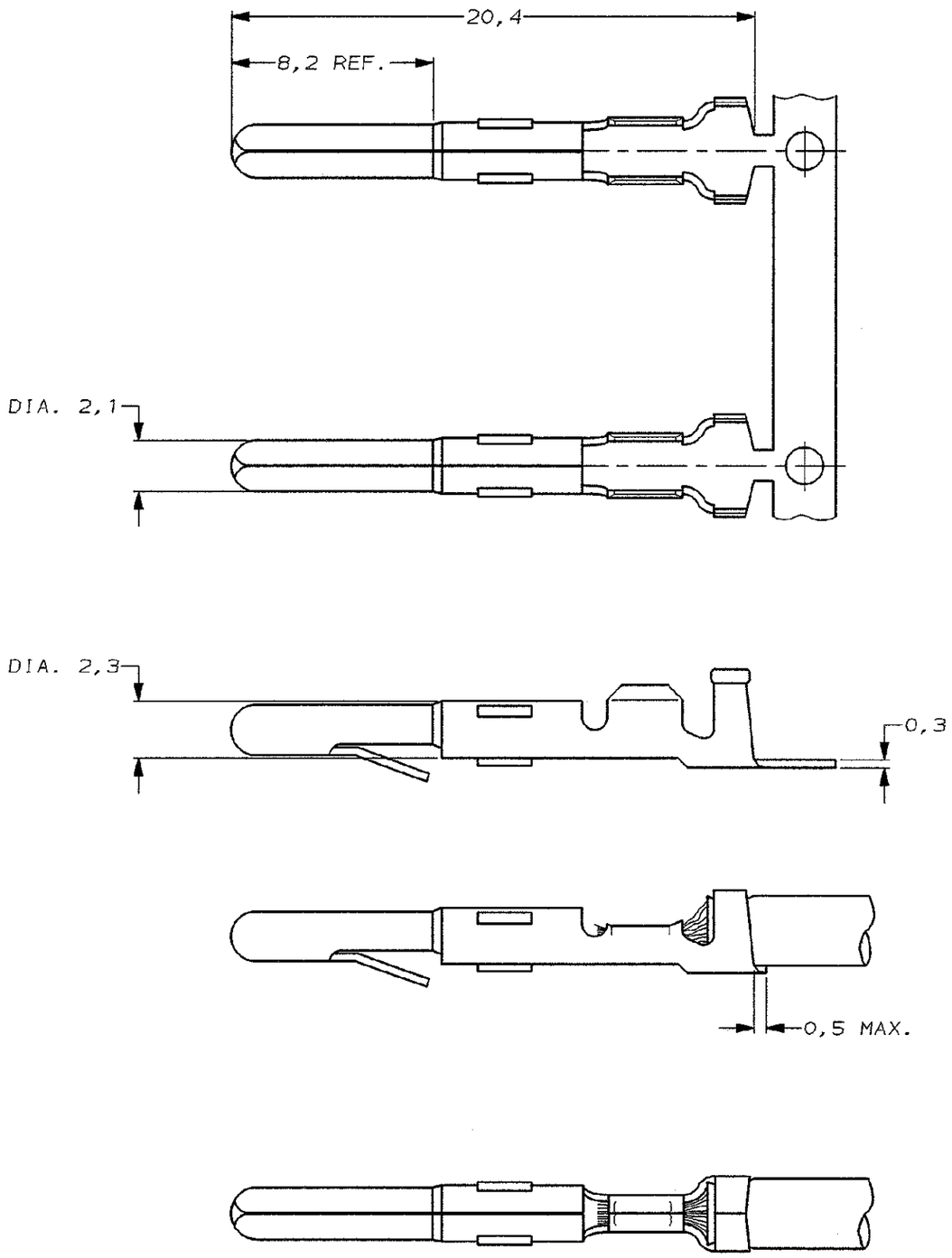

DO NOT SCALE	METRIC	THIRD ANGLE PROJECTION
DIMENSIONS IN mm		

NOTES:

1. FOR USE ON STANDARD APPLICATORS (RIGHT- LEFT FEED).
2. FOR USE ON MINIATURE APPLICATORS (LEFT- RIGHT FEED)

WIRE RANGE : 0,3-0,75mm
INSULATION RANGE : 1,4-2,4 DIA.

NOTES	PLATING	MATERIAL	PARTNUMBER
	-	-	-
		-	-
	-	-	-
	-	-	-
2	PRE-TINPLATED	PHOSPHOR BR.	163555-8
2	UNPLATED	PHOSPHOR BR.	163555-7
2	PRE-TINPLATED	BRASS	163555-6
2	UNPLATED	BRASS	163555-5
1	PRE-TINPLATED	PHOSPHOR BR.	163555-4
1	UNPLATED	PHOSPHOR BR.	163555-3
1	PRE-TINPLATED	BRASS	163555-2
1	UNPLATED	BRASS	163555-1

LTR.	REVISION RECORD	DR.	CHK.	DATE
-	-	-	-	-
-	-	-	-	-
-	-	-	-	-
-	-	-	-	-
-	-	-	-	-
-	-	-	-	-
-	-	-	-	-
B	EH-1221-96	JvL	AB	24-10-96

CUSTOMER DRAWING — FOR REFERENCE ONLY WILL NOT BE UPDATED

© COPYRIGHT 19- BY AMP HOLLAND B.V.
ALL INTERNATIONAL RIGHTS RESERVED. AMP PRODUCTS MAY BE COVERED BY U.S. AND FOREIGN AND/OR PATENTS PENDING.

THIS DRAWING IS UNPUBLISHED
~~RELEASED FOR PUBLICATION ,19~~

AMP — AMP HOLLAND B.V. 's-Hertogenbosch, The Netherlands.

NAME: PIN MATE-N-LOK.

DR.: J.v.LIEMPT	CHK.: A.BIJNEN.	APP.: M.v.DRIEL	DWG.No. C-163555	REV.LTR. B	SHEET 1 OF 1	A3
DATE: 24 OCT 96	DATE: -	DATE: -				

R6-210 (REV.04-91)

8 7 6 5 4 3 2 1

F E D C B A