THIS DRAWING IS UNPUBLISHED. RELEASED FOR PUBLICATION 20
© COPYRIGHT 20 BY - ALL RIGHTS RESERVED.

REVISIONS					
P	LTR	DESCRIPTION	DATE	DWN	APVD
	A	INITIAL	23JUN2015	DW	CW

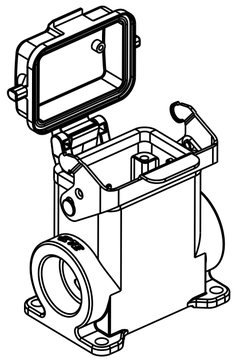

SCALE 1:2

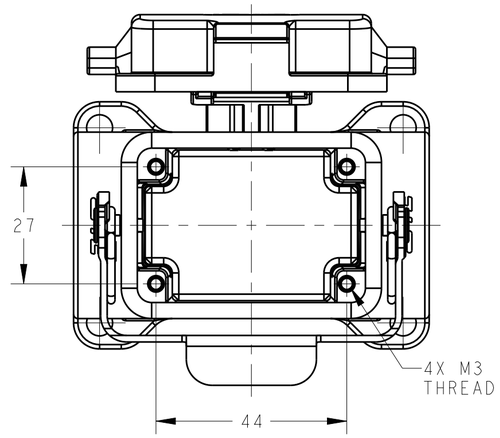

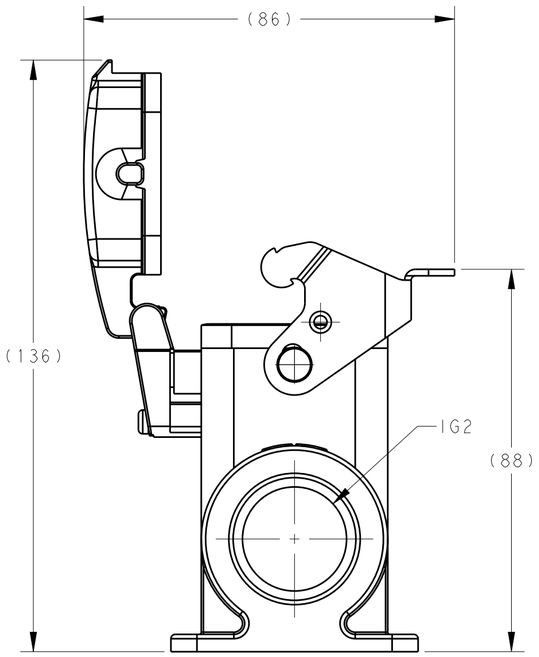

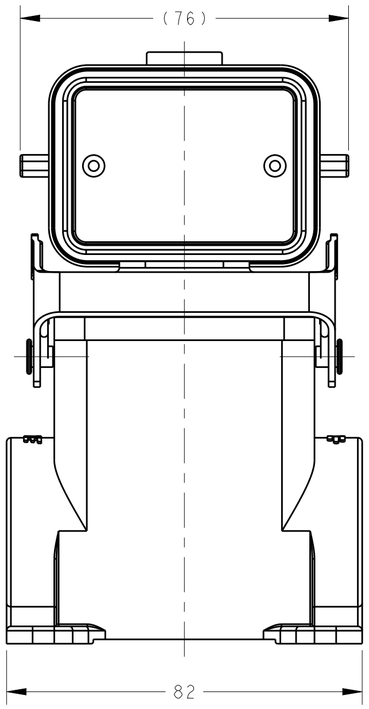

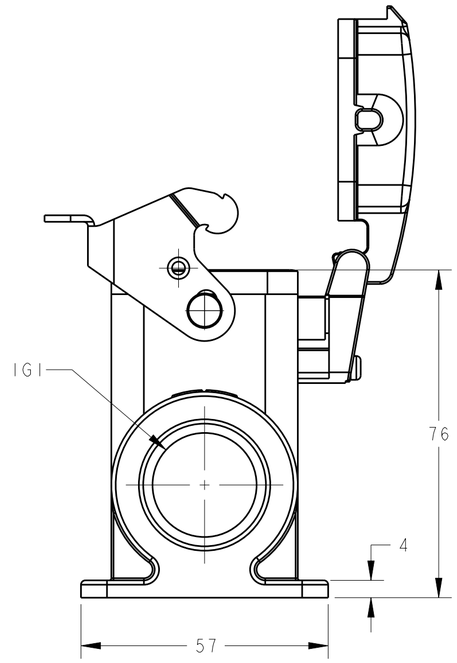

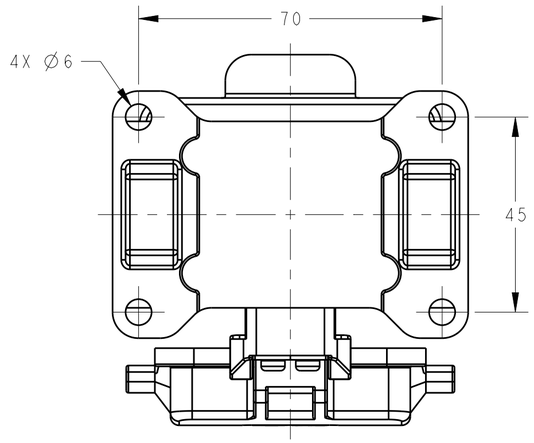

NOTES:
1. TECHNICAL CHARACTERISTICS:
   HOUSING MATERIAL: DIE CAST ALUMINIUM ALLOY
   SURFACE: POWDER COATED, GREY
   OPERATION TEMPERATURE: -40-+125°C
   DEGREE OF PROTECTION: IP65 (MATED)

注释：
1. 技术参数：
   下壳材料： 铝合金
   表面处理： 粉末涂层，灰色
   工作温度： -40-+125°C
   防护等级： IP65(配合)

PART NUMBER	DESCRIPTION	IG1	IG2
T1660063121-000	H6B-SDRH-PG21	PG21	-
T1660063125-000	H6B-SDRH-M25	M25	-
T1660063129-000	H6B-SDRH-PG29	PG29	-
T1660063132-000	H6B-SDRH-M32	M32	-
T1660063221-000	H6B-SDRH-2PG21	PG21	PG21
T1660063225-000	H6B-SDRH-2M25	M25	M25
T1660063229-000	H6B-SDRH-2PG29	PG29	PG29
T1660063232-000	H6B-SDRH-2M32	M32	M32

THIS DRAWING IS A CONTROLLED DOCUMENT.

DIMENSIONS: mm

TOLERANCES UNLESS OTHERWISE SPECIFIED:
0 PLC ±-
1 PLC ±-
2 PLC ±-
3 PLC ±-
4 PLC ±-
ANGLES ±-

MATERIAL -
FINISH -
- -

DWN David Wang 23JUN2015
CHK Chris Wang 23JUN2015
APVD Xiang Xu 23JUN2015
PRODUCT SPEC 108-137013
APPLICATION SPEC 114-137013
WEIGHT -

TE Connectivity

NAME H6B-SDRH-M/PG

SIZE	CAGE CODE	DRAWING NO	RESTRICTED TO
A2	00779	C-T1660063XXX000	-

Customer Drawing

SCALE 1:1 SHEET 1 OF 1 REV A

1471-9 (3/13)