THIS DRAWING IS UNPUBLISHED. RELEASED FOR PUBLICATION 20
© COPYRIGHT 20 BY - ALL RIGHTS RESERVED.

REVISIONS					
P	LTR	DESCRIPTION	DATE	DWN	APVD
	A	INITIAL RELEASE	14OCT2014	RK	BvH

NOTES:

1 ASSEMBLIES TO BE TESTED FOR 100% CONTINUITY

2 ASSEMBLIES ARE PACKAGED ACCORDING PACKAGING SPEC 107-19582

3 RED MARKED CORRESPONDS TO PIN 1

4 FOR MOW TO PB SEE 2205068

5 HOUSING COLOR BLACK

SCALE : 4:1

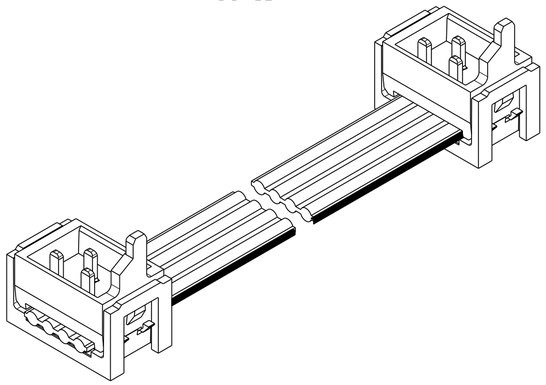

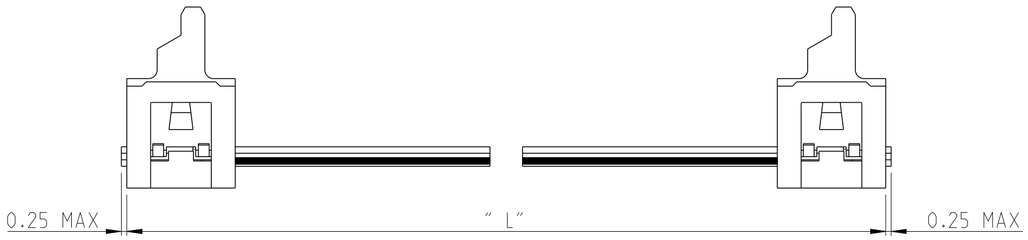

SIDE A

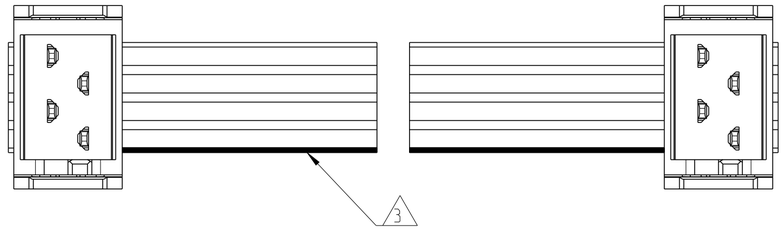

SIDE B

2205103-X (4 POSITION CABLE ASSEMBLY) AS SHOWN

TE PN	POS	LENGTH	DESCRIPTION
2205111-3	20	200	CA MICRO-MATCH MOW-MOW 20POS
2205111-2	20	150	CA MICRO-MATCH MOW-MOW 20POS
2205111-1	20	75	CA MICRO-MATCH MOW-MOW 20POS
2205110-3	18	200	CA MICRO-MATCH MOW-MOW 18POS
2205110-2	18	150	CA MICRO-MATCH MOW-MOW 18POS
2205110-1	18	75	CA MICRO-MATCH MOW-MOW 18POS
2205109-3	16	200	CA MICRO-MATCH MOW-MOW 16POS
2205109-2	16	150	CA MICRO-MATCH MOW-MOW 16POS
2205109-1	16	75	CA MICRO-MATCH MOW-MOW 16POS
2205108-3	14	200	CA MICRO-MATCH MOW-MOW 14POS
2205108-2	14	150	CA MICRO-MATCH MOW-MOW 14POS
2205108-1	14	75	CA MICRO-MATCH MOW-MOW 14POS
2205107-3	12	200	CA MICRO-MATCH MOW-MOW 12POS
2205107-2	12	150	CA MICRO-MATCH MOW-MOW 12POS
2205107-1	12	75	CA MICRO-MATCH MOW-MOW 12POS
2205106-3	10	200	CA MICRO-MATCH MOW-MOW 10POS
2205106-2	10	150	CA MICRO-MATCH MOW-MOW 10POS
2205106-1	10	75	CA MICRO-MATCH MOW-MOW 10POS
2205105-3	8	200	CA MICRO-MATCH MOW-MOW 8POS
2205105-2	8	150	CA MICRO-MATCH MOW-MOW 8POS
2205105-1	8	75	CA MICRO-MATCH MOW-MOW 8POS
2205104-3	6	200	CA MICRO-MATCH MOW-MOW 6POS
2205104-2	6	150	CA MICRO-MATCH MOW-MOW 6POS
2205104-1	6	75	CA MICRO-MATCH MOW-MOW 6POS
2205103-3	4	200	CA MICRO-MATCH MOW-MOW 4POS
2205103-2	4	150	CA MICRO-MATCH MOW-MOW 4POS
2205103-1	4	75	CA MICRO-MATCH MOW-MOW 4POS

THIS DRAWING IS A CONTROLLED DOCUMENT.

DIMENSIONS: mm

TOLERANCES UNLESS OTHERWISE SPECIFIED:
0 PLC ±
1 PLC ±
2 PLC ±
3 PLC ±
4 PLC ±
ANGLES ±

MATERIAL -
FINISH -

DWN RAVINDRA K 14OCT2014
CHK B. VELDHOVEN 14OCT2014
APVD G. DOREMALEN VAN 14OCT2014
PRODUCT SPEC -
APPLICATION SPEC -
WEIGHT -

TE Connectivity

NAME CABLE ASSY MICRO-MATCH MOW-MOW VALUE-LINE
-

SIZE	CAGE CODE	DRAWING NO	RESTRICTED TO
A2	-	C-2205103	-

Customer Drawing | SCALE 5:1 | SHEET 1 OF 1 | REV A