Alle Rechte vorbehalten/ *All rights reserved*

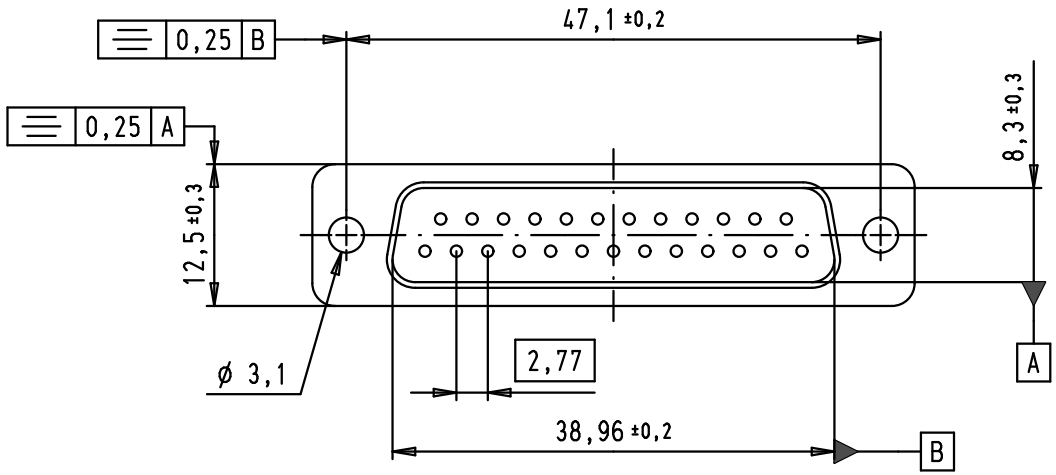

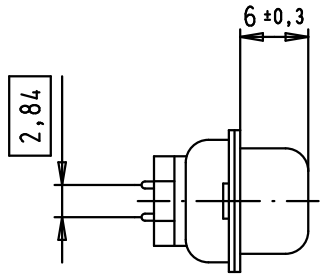

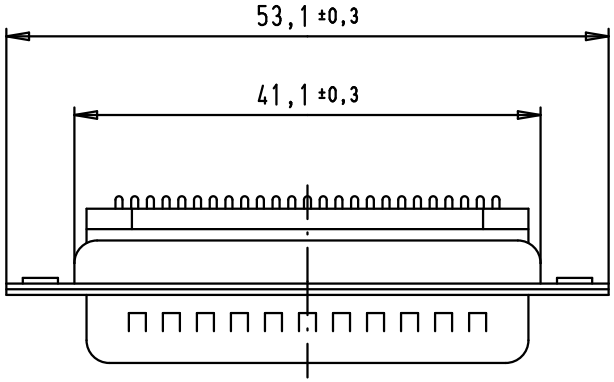

SPECIFICATIONS

FREQUENCY (MHz)	ATTENUATION (dB)
5	0,5
10	1
50	2,5
100	3
500	3,5
1000	4

Operating voltage	< 250 V AC
Working current	< 7,5 A
Insulation resistance	> 1GΩ
Contact resistance	< 15 mΩ
Dielectric withstanding voltage	500 V AC / minute

Solder bucket termination inner diameter: 1,20 mm

09 64 321 7800	PL3
Part number	Performance level

Mod.	Dat.	Name
36160	22/09/10	SC
EC00332	11/06/09	PK

	Dat.	Name
Detail.	11/06/09	PK
Insp.		
Stand.		

All Dim. in mm
Orig. Size DIN A 4

HARTING EURL
F-95972 Paris

D-Sub, male, straight, 25 poles, tin plated shell with dimples, solder buckets, ferrite filter

Maßstab/ *Scale* 1,5:1

TB 09 64 321 7800

Sub.

Blatt/ *Page* 1/1