Bottom View

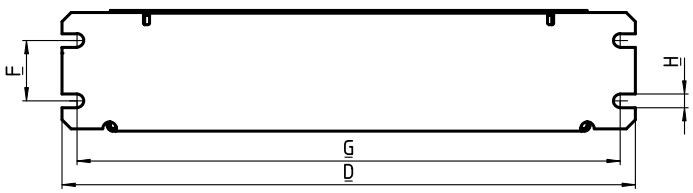

Side View

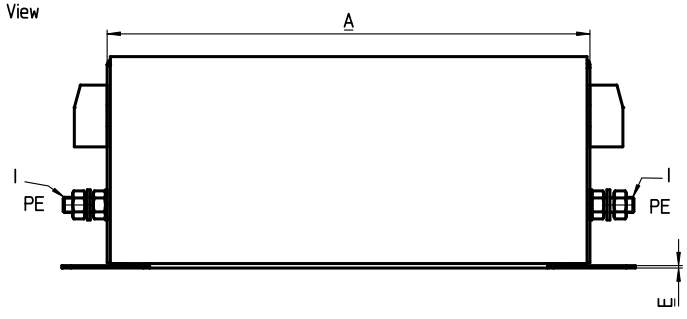

Front View

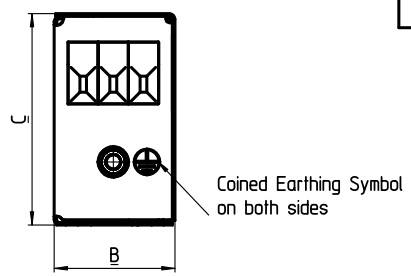

Top View

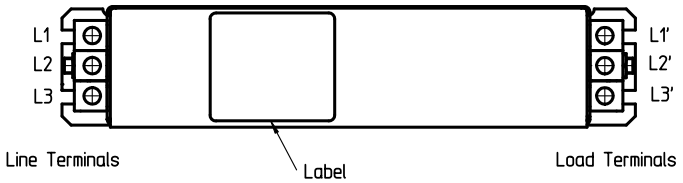

Dimensions

	7BCF10	16BCF10	30BCF10	42BCF10	55BCF10	75BCF10	100BCF10	130BCF10	180BCF10	Tol.
A	160	220	240	280	220	240			350	±1
B	40	45	50		85	80	90 ±0,8		120 ±0,8	±0,6
C	70 ±0,6		85		90	135 ±1	150 ±1		170 ±1	±0,8
D	190	250	270	310	250	270			380	±1
E	0,8				1					±0,1
F	20	25	30		60		65		102	±0,3
G	180	235	255	295	235	255			365	±0,5
H	4,5	5,4				6,5				±0,2
I	M5			M6			M10			---

all dimensions in mm

Electrical Schematic

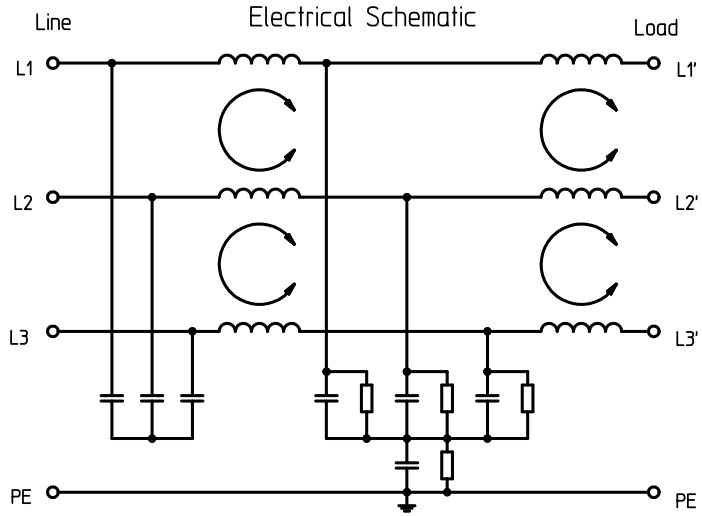

Specifications

	7BCF10	16BCF10	30BCF10	42BCF10	55BCF10	75BCF10	100BCF10	130BCF10	180BCF10
Voltage	3phase 480/277 VAC								
Frequency	50Hz / 60Hz								
Rated current @50°C	7A	16A	30A	42A	55A	75A	100A	130A	180A
max leakage current	33mA @400VAC/50Hz								
Operating temperatur	-10°C to +55°C (derating on request)								
Storage temperature	-25°C to +100°C								
Wire range solid	0,2-6mm²		0,5-16mm²		0,5-25mm²	6-35mm²	16-50mm²		25-95mm²
Wire range flex	0,2-4mm²		0,5-10mm²		0,5-16mm²	10-25mm²	16-50mm²		35-95mm²
max torque terminals	0,8Nm		1,8Nm		2,3Nm	4,5Nm	8Nm		20Nm
max torque PE	3Nm			8Nm			20Nm		
Housing	CRS zinc plated								
Protection Category	IP20								
Approvals	UL and VDE								

All materials and finishes comply with RoHS directive.

High voltage test

phase-phase 2100VDC for 2sec.
phase-earth 2650VDC for 2sec.

Type	Corcom PN	TYCO PN
7BCF10	F8232	0-160989-1
16BCF10	F8233	0-160989-2
30BCF10	F8234	0-160989-3
42BCF10	F8235	0-160989-4
55BCF10	F8236	0-160989-5
75BCF10	F8237	0-160989-6
100BCF10	F8238	0-160989-7
130BCF10	F8239	0-160989-8
180BCF10	F8240	0-160989-9

THIS INFORMATION IS CONFIDENTIAL AND PROPRIETARY TO TYCO ELECTRONICS AUSTRIA GMBH, AND ITS WORLDWIDE SUBSIDIARIES AND AFFILIATES. IT MAY NOT BE DISCLOSED TO ANYONE OTHER THAN TYCO ELECTRONICS PERSONNEL, WITHOUT WRITTEN AUTHORIZATION FROM TYCO ELECTRONICS AUSTRIA.

PART NO: | PART NAME: | MATERIAL/SURFACE: | OPTIONAL DESCRIPTION
PART LIST
TOLERANCES UNLESS OTHERWISE SPECIFIED ACCORDING TO ISO 8015 and ISO 2768-f | DIMENSIONS: mm
test dimen. / Prüfmaß: ▭; auxiliary dimen. / Hilfsmaß: ( ) ; theor. dimen. / theor. Maß: ▭;
production control dimen. / Fertigungskontr.maß: [ ] ; dimen. for measure. technology / messtechn. rel. Maß:] [;

ECR-NO.:	DATE	NAME	INFO		DATE	NAME
				DEPARTMENT	R & D RSF	
				DRAWER	09.07.2008	Weiden
				CHECKED		
3,1	9-7-08	WEIH	New Tyco Logo	APPROVED		Mader

Tyco Electronics

SCALE: 1:1
NAME: **BCF Series**
Customer Drawing
DWG NO.: C-1609989
OPTIONAL NO.: CRF8232-CRF8240
REVISION 32
SIZE A2 | REPLACEMENT FOR: | DWG LOC NO.: F | SHEET: 1 OF 1

THIS DRAWING IS A CONTROLLED DOCUMENT, HANDWRITTEN CHANGES ARE NOT ALLOWED