THIS DRAWING IS UNPUBLISHED. RELEASED FOR PUBLICATION -,- .
© COPYRIGHT - By - ALL RIGHTS RESERVED.

REVISIONS

P	LTR	DESCRIPTION	DATE	DWN	APVD
	A	REVISED PER ECR-15-016346	11MAY2016	NK	LP

1 THE MATING COUNTER PART P/N (172127 etc.)

2 APPLIED CONTACT (170032,170258,170384)

3 DBL LOCK PLATE
MATERIAL: PBT
COLOR ; YELLOW

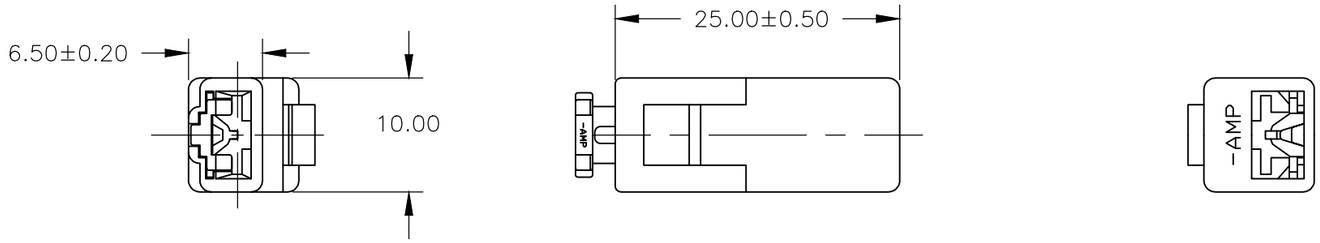

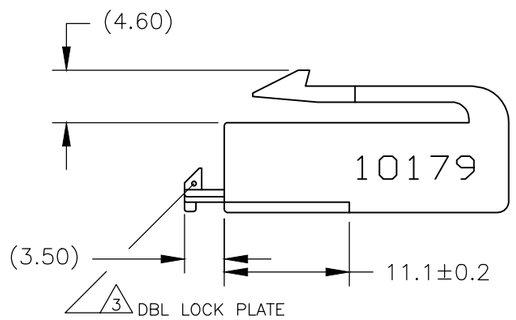

	6-176986-6	(LIGHT GRAY)
	176986-6	(GRAY)
	176986-5	(BLUE)
OBSOLETE	~~176986-4~~	(GREEN)
OBSOLETE	~~176986-3~~	(BROWN)
	176986-2	(BLACK)
	176986-1	(NATURAL)
COLOR SEE TABLE	(P/N)	(COLOR)

THIS DRAWING IS A CONTROLLED DOCUMENT.

DIMENSIONS: mm

TOLERANCES UNLESS OTHERWISE SPECIFIED:

0 PLC	± -
1 PLC	± 0.2
2 PLC	± 0.25
3 PLC	± 0.3
4 PLC	± -
ANGLES	± 3°

MATERIAL: 6/6 NYLON

FINISH: -

DWN	T. Sugawa	17SEP1990
CHK	M. Ochiai	17SEP1990
APVD	Y. Matsuzaka	17SEP1990

PRODUCT SPEC: —

APPLICATION SPEC: —

WEIGHT: —

CUSTOMER DRAWING

TE Connectivity

NAME: .250 SERIES DOUBLE LOCK CONNECTOR 1 POS. PLUG HOUSING

SIZE	CAGE CODE	DRAWING NO	RESTRICTED TO
A3	00779	C-176986	—

SCALE	SHEET	REV
2:1	1 OF 1	A