DWG NO.	SH	REV
STD-4892	1 OF 1	2

REVISIONS

ECN	REV.	DESCRIPTION	CHNG/DATE	APPVD/DATE
06642	1	CHANGED SHIELD DIM	MY, 2008-09-08	FG, 2008-09-08
07992	2	MARKING INFO	MDP,2015-08-25	MPN,2015-08-25

NOTES:

1. ELECTRICAL SPECIFICATIONS:
   - C.F. = 427.25 MHz
   - INSERTION LOSS @ C.F. = 3.0 dB MIN., 5.0 dB MAX.
   - IMPEDANCE: 75 OHMS IN/OUT
   - RETURN LOSS = 14 dB MIN. @ 427.25 MHz
   - RIPPLE = 0.2 dBc MAX. WITHIN ±0.5 MHz OF C.F.
   - ATTENUATION: @ Fo: ±6 MHz @ 18 dBc MIN.
     @ Fo: ±12 MHz @ 28 dBc MIN.
     @ Fo: ±18 MHz @ 45 dBc MIN.
     @ Fo: ±50 MHz @ 40 dBc MIN.
     FROM 50 TO 300 MHz @ 35 dBc MIN.
     FROM 750 TO 862 MHz @ 30 dBc MIN.
2. ENVIRONMENTAL SPECIFICATIONS:
   - OPERATING TEMPERATURE: −40° TO +85° C
   - STORAGE TEMPERATURE: −40° TO +90° C
3. PART MUST BE MARKED WITH C-COR PART NUMBER.

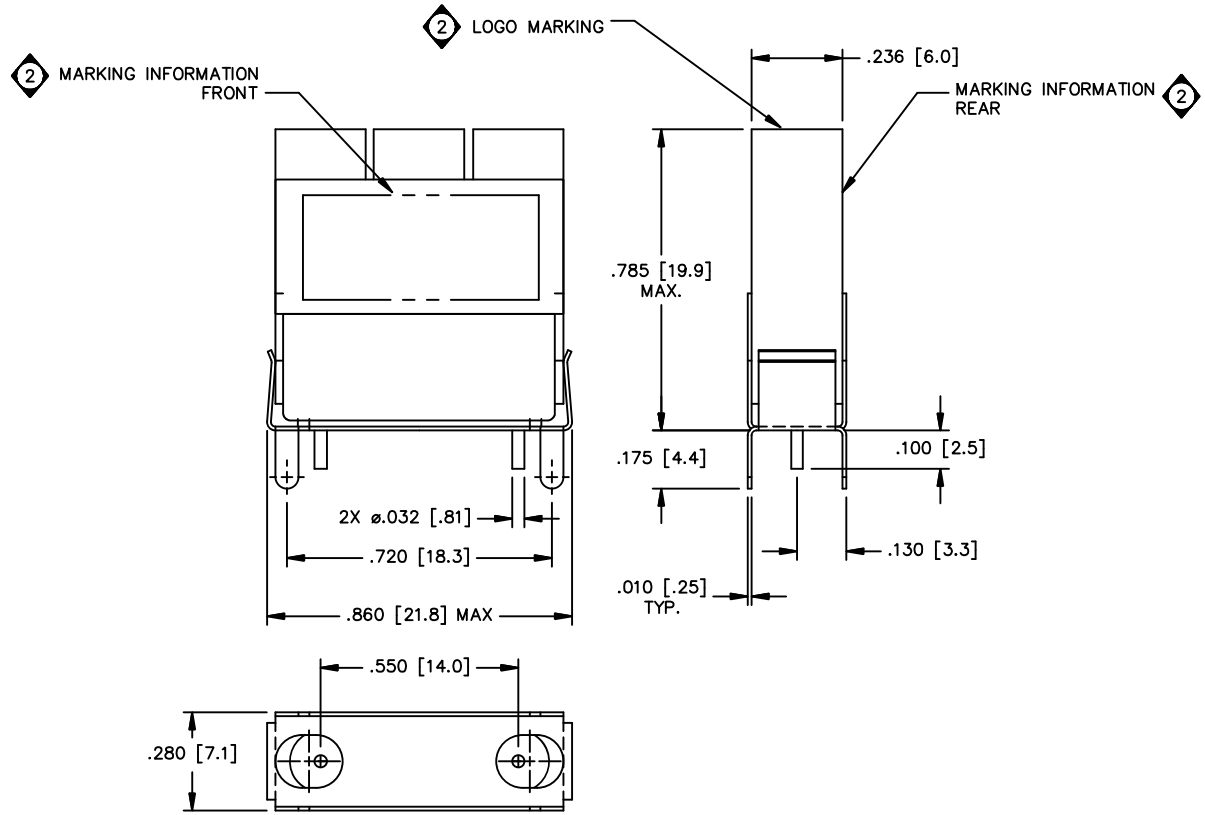

API TECHNOLOGIES CORP. PROPRIETARY INFORMATION
THIS DOCUMENT IS THE SOLE PROPERTY OF API TECHNOLOGIES CORP. THE RELEASE OF DATA CONTAINED IN THIS DOCUMENT AND THE REPRODUCTION OF THIS DOCUMENT, IN WHOLE OR IN PART, WITHOUT THE WRITTEN PERMISSION OF API TECHNOLOGIES CORP. ARE PROHIBITED.

UNLESS OTHERWISE SPECIFIED
* INTERPRET DRAWING IAW ASME Y 14.100-2004
* DIMENSIONING AND TOLERANCING IAW ASME Y14.5 / PN4
* PARENTHETICAL INFORMATION FOR REFERENCE ONLY
* DIMENSIONAL LIMITS APPLY BEFORE PROCESSES
* DIMENSIONS ARE IN INCHES
* TOLERANCES ARE: ANGLES ±1.0° 2 PLACE DECIMAL ±.02 3 PLACE DECIMAL ±.005
* SURFACE FINISH 63
* REMOVE ALL BURRS AND SHARP EDGES, 0.10 RAD MAX.
* CONCENTRICITY MACHINED DIA. .002 FIM
* MACHINED TOOL MISMATCH .002 MAX.

DO NOT SCALE DRAWING

3rd ANGLE PROJECTION
ANSI

		DATE
DRAWN	MY	2004-07-20
CHECKED		
ENGRG	FG	2004-07-20
MFG		
QA		
APPROVED	SB	2004-07-20

API TECHNOLOGIES CORP.
7100 Columbia Gateway Drive
Columbia, MD 21046-2957 (USA)

TITLE: SALES DRAWING, BPF3-0427-005LA

SIZE	CAGE CODE	DWG NO.	REV
C	67195	STD-4892	0

SCALE: 4:1 SHEET 1 OF 1

COMPUTER ASSISTED DRAWING
GENERATED USING AUTOCAD 2002

FORM NO. 1054 SIZE C1