THIS DRAWING IS UNPUBLISHED. RELEASED FOR PUBLICATION ,19 .
© COPYRIGHT 19 BY AMP INCORPORATED. ALL RIGHTS RESERVED.

LOC	DIST
DY	-

REVISIONS

P	LTR	DESCRIPTION	DATE	DWN	APVD
	O1	REVISED PER ECO-09-026495	15FEB10	KK	HMR

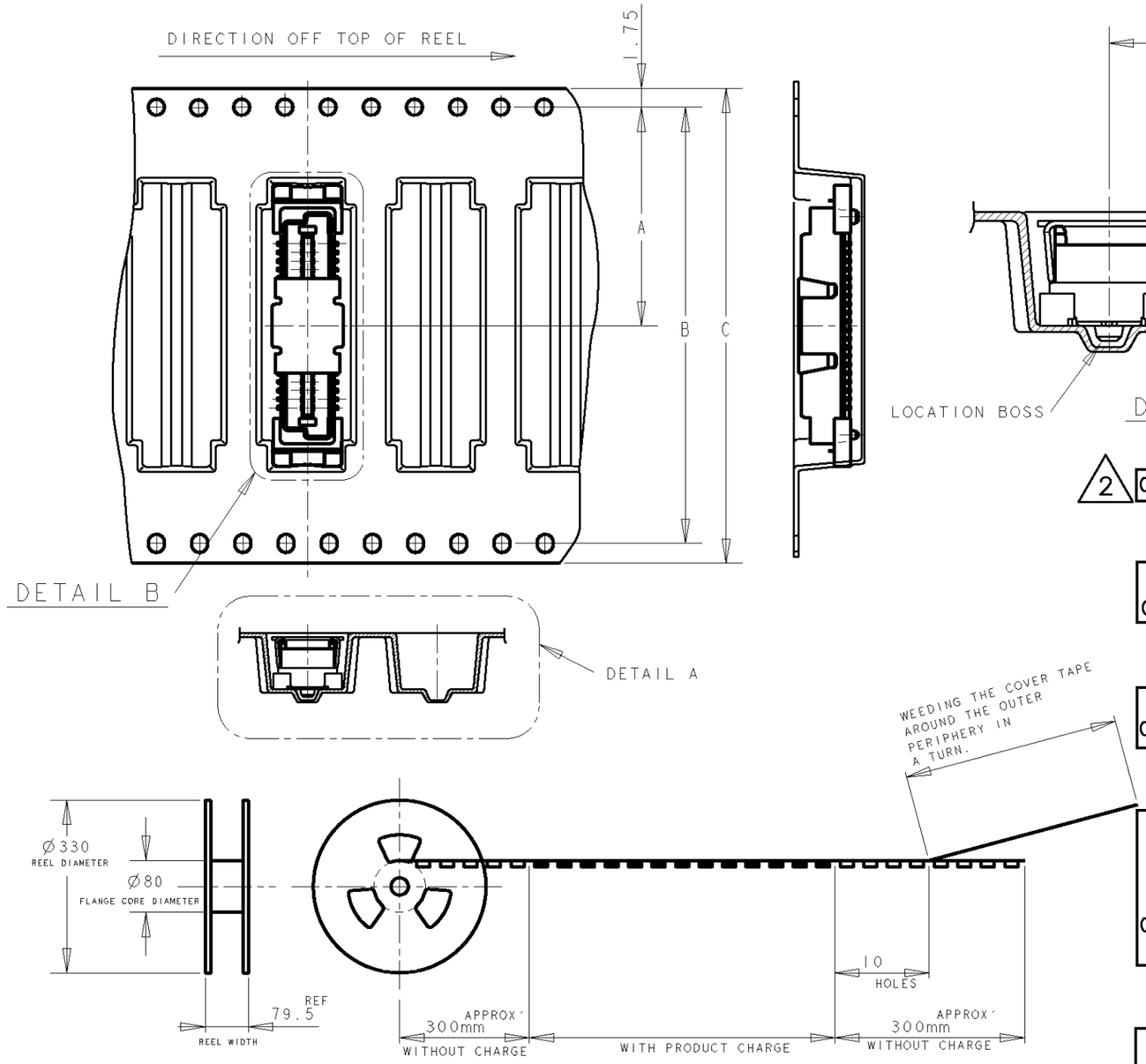

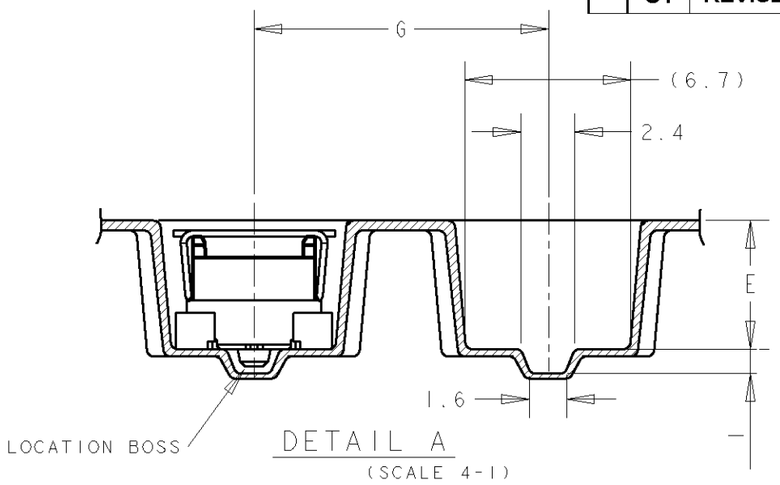

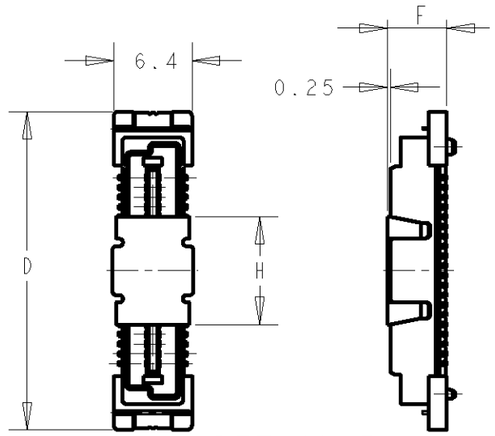

QYT	HEIGHT TYPE	H	G	F	E	D	C	B	A	POS	CONN P/N	PART NO.
						58				120	-5	~~3- 5~~
400		17	16			50	72	68.4	34.2	100	-4	3- -4
						42	56	52.4	26.2	80	-3	3- -3
						34	44	40.4	20.2	60	-2	~~3- 2~~
600	8H	8.8	12	7.85	8.25	26	44	40.4	20.2	40	5179106-1	~~3-5179161-1~~
						58				120	-5	2- -5
450		17	16			50	72	68.4	34.2	100	-4	2- -4
						42	56	52.4	26.2	80	-3	~~2- 3~~
						34	44	40.4	20.2	60	-2	~~2- 2~~
700	7H	8.8	12	6.85	7.25	26	44	40.4	20.2	40	5179104-1	2-5179161-1
						58				120	-5	1- -5
550		17	16			50	72	68.4	34.2	100	-4	~~1- 4~~
						42	56	52.4	26.2	80	-3	~~1- 3~~
						34	44	40.4	20.2	60	-2	~~1- 2~~
800	6H	8.8	12	5.85	6.25	26	44	40.4	20.2	40	5179102-1	~~1-5179161-1~~
						58				120	-5	~~5~~
650		17	16			50	72	68.4	34.2	100	-4	-4
						42	56	52.4	26.2	80	-3	-3
						34	44	40.4	20.2	60	-2	~~2~~
900	5H	8.8	12	4.85	5.25	26	44	40.4	20.2	40	5177935-1	~~5179161-1~~

2 OBSOLETE

NOTE:

1. THIS PRODUCT WAS COATED BY FLUX-PENETRATION -INHIDITING AGENT.

2 OBSOLETE PARTS: OBSOLETE CIS STREAMLINING PER D.RENAUD/D.SINISI

THIS DRAWING IS A CONTROLLED DOCUMENT FOR AMP INCORPORATED. IT IS SUBJECT TO CHANGE AND THE CONTROLLING ENGINEERING ORGANIZATION SHOULD BE CONTACTED FOR THE LATEST REVISION.

DIMENSIONS: mm

TOLERANCES UNLESS OTHERWISE SPECIFIED:

0 PLC	±-
1 PLC	±0.2
2 PLC	±0.25
3 PLC	±0.3
4 PLC	±-
ANGLES	±3°

MATERIAL -
FINISH -

DWN FLORENCE TAN 20SEP04
CHK ERIC TNG
APVD SF LFONG
PRODUCT SPEC -
APPLICATION SPEC -
WEIGHT -

Tyco Electronics
Tyco Electronics (Singapore) Pte. Ltd.

NAME
PLUG ASS'Y WITH SOLDER PEG, FH 0.8mm B-T-B CONN. (STACK HEIGHT 5mm, 0.7 BOSS LENGTH) ON TAPING

SIZE	CAGE CODE	DRAWING NO
A3	00779	C-5179161

CUSTOMER DRAWING

SCALE 2:1 SHEET 1 OF 1 REV O1

PROJ NO.593-314

AMP 1470-19 REV 09MAY94

Pro/ENGINEER DRAWING