THIS DRAWING IS UNPUBLISHED. RELEASED FOR PUBLICATION
© COPYRIGHT 1997. BY TYCO ELECTRONICS CORPORATION. ALL RIGHTS RESERVED.

LOC	DIST
A1	

REVISIONS

P	LTR	DESCRIPTION	DATE	DWN	APVD
	A11	ECR-16-016780	15NOV2017	GR	MKO

NOTES.

1 Material:Housing:Aluminium Diecasting Alloy

2 Surface-Powder Varnish Grey
-Aluminium Oxide +
Varnish Black
-Chromit Passivation +
Varnish Black

3 Varnish on the inside not necessary

4 Special Packaging

5 Packaging
Quantity 5 Pieces in a box

PN 1-9.1-5.1-8 & 1-4

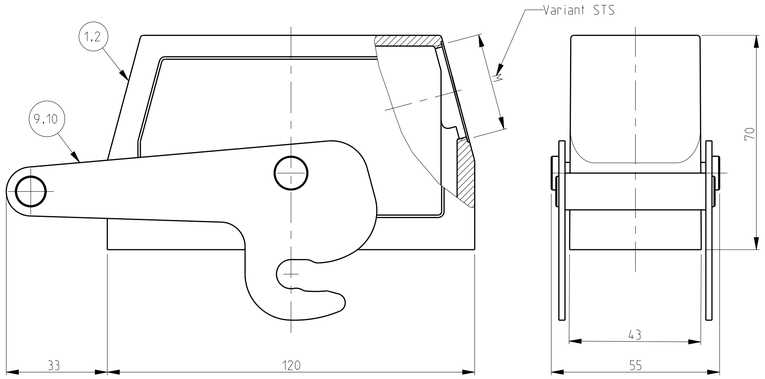

PN 0-1.1-0
2-6.0-7 & 0-9 (Die cast Bolt)

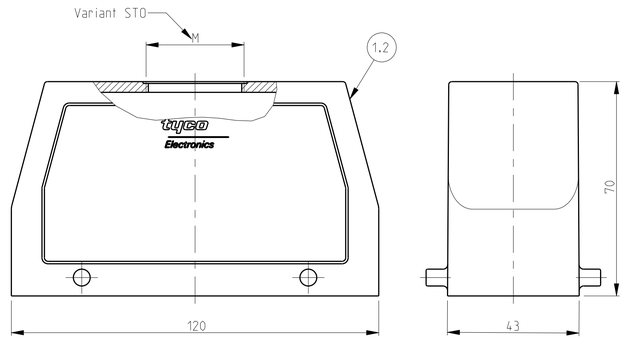

PN 2-5

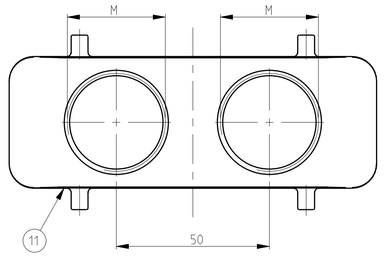

PN 1-2

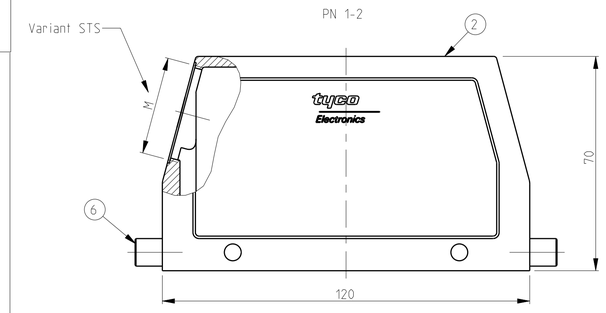

PN 1-1.1-3.
2-2.0-4.2-8 & 2-4 (Die cast Bolt)

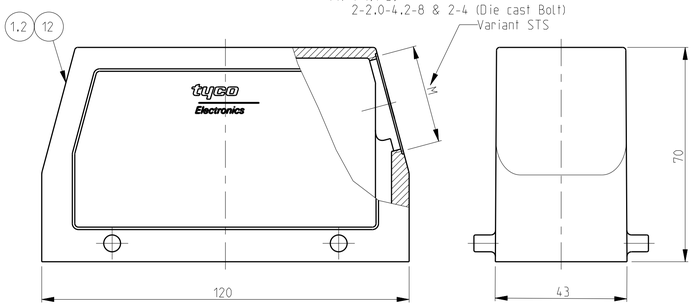

PN 0-2

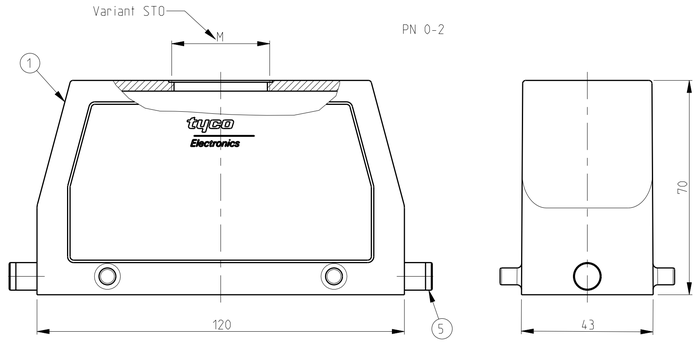

PN 1-2

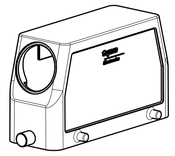

SCALE 1:2

PN 0-6 & 2-3

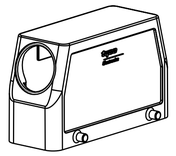

SCALE 1:2

PN 0-3

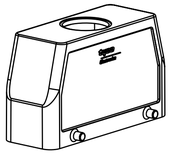

SCALE 1:2

PN 2-5

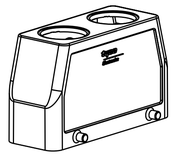

SCALE 1:2

PN 0-8

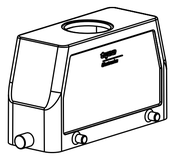

SCALE 1:2

PN 0-5 & 2-7

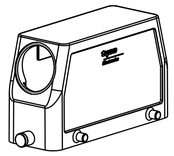

SCALE 1:2

PN 0-2

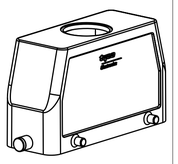

SCALE 1:2

PN 1-1. 2-2. 0-4.1-3
2-8 & 2-4 (Die cast Bolt)

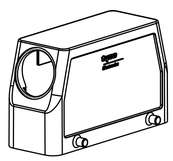

SCALE 1:2

PN 0-1. 2-6. 0-7.1-0
& 0-9 (Die cast Bolt)

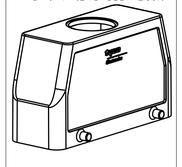

SCALE 1:2

PN 1-9.1-5.1-8 & 1-4

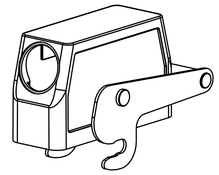

SCALE 1:2

PN 0-3

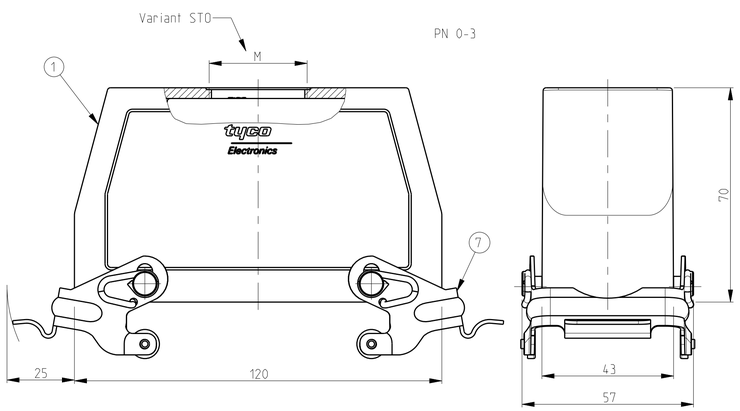

PN 0-6 & 2-3

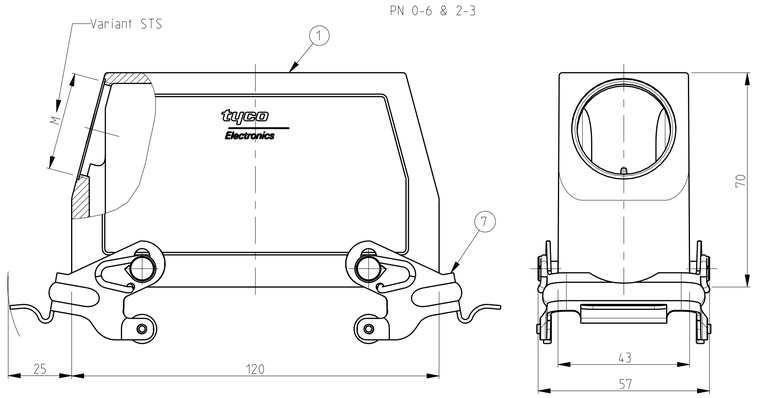

2-8	2-7	2-6	2-5	2-4	2-3	2-2	2-1	2-0	1-9	1-5	1-9	1-3	0-6	1-2	0-5	1-1	0-4	1-4	1-8	1-0	0-3	0-8	0-2	0-7	0-1	DESCRIPTION	MATERIAL	SURFACE	COLOR	ITEM NO	NOTES
OBSOLETE										OBSOLETE				OBSOLETE								OBSOLETE									
	1																									HB-EMV Hood	Aluminium	Aluminium Chromated	Black	12	
			1																							HB Hood	Aluminium		Grey	11	2xM32
																		1								ZB Central clip	Stainless Steel	Blank		10	
											1								1							ZB Central clip	Steel	Zinc Plated	Blue	9	
																										VS Locking clip	Stainless Steel	Blank		8	
						2							2								2					VS Locking clip	Steel	Zinc Plated	Blue	7	
														2									2			LB Clip bolt	Stainless Steel	Blank		6	
		2													2									2		LB Clip bolt	Steel	Zinc Plated	Blue	5	
																										VS Locking clip bolt	Stainless Steel	Blank		4	
OBSOLETE																										H-EMV Hood	Aluminium		Grey	3	
											1		1		1		1		1		1				1	HB-K Hood	Aluminium	Aluminium Oxide	Black	2	
			1		1	1	1					1		1		1		1		1		1		1		HB Hood	Aluminium		Grey	1	
HB-EMV-24.STS-GR.1.M32.G	HB-EMV.24.STS-GR.1.M32.G	HB.24.STS.1.M32-STO.1.M20.G	HB.24.STS.2.M32.G.KM	HB.24.STS.1.M25.G	HB.24.STS-VS.1.M32.G.KM	HB.24.STS.1.M32.G.KM	HB-24.STS-H.M32-G-ELCON	HB-24.STO-H.M32-G-ELCON	HB-K-Z.24.STS-ZB.1.M32.G	HB-Z.24.STS-VS.1.M32.G	HB-K.STS-VS.1.M32.G	HB.24.STS-VS.1.M32.G	HB-K.24.STS-GR.1.M32.G	HB.24.STS-GR.1.M32.G	HB-K.24.STS.1.M32.G	HB.24.STS.1.M32.G	HB-K-Z.24.STO-ZB.1.M32.G	HB-Z.24.STO-ZB.1.M32.G.SO	HB-K.24.STO-VS.1.M32.G	HB.24.STO-VS.1.M32.G	HB-K-Z.24.STO-GR.1.M32.G	HB-K.24.STO.1.M32.G	HB.24.STO.1.M32.G								

THIS DRAWING IS A CONTROLLED DOCUMENT FOR TYCO ELECTRONICS CORPORATION. IT IS SUBJECT TO CHANGE AND THE CONTROLLING ENGINEERING ORGANIZATION SHOULD BE CONTACTED FOR THE LATEST REVISION			
DIMENSIONS: mm	TOLERANCES UNLESS OTHERWISE SPECIFIED: 0 PLC ± 1 PLC ± 2 PLC ± 3 PLC ± 4 PLC ± ANGLES ±	DWN Schneider 01.08.2000	TE Connectivity
		CHK Schweiger 01.08.2000	NAME HOOD HB.24.STO/STS M-Thread
		APVD -	
		PRODUCT SPEC 108-74001 108-74003	
		APPLICATION SPEC 114-74001 114-74004	SIZE A1 / CAGE CODE / DRAWING NO C-1106465 / RESTRICTED TO -
MATERIAL	FINISH	WEIGHT -	
		CUSTOMER DRAWING	SCALE 1:1 / SHEET 1 OF 1 / REV A11