THIS DRAWING IS UNPUBLISHED. RELEASED FOR PUBLICATION 20
© COPYRIGHT 20 BY - ALL RIGHTS RESERVED.

REVISIONS

P	LTR	DESCRIPTION	DATE	DWN	APVD
	A	INITIAL RELEASE	23APR2015	DL	CW
	A1	ECR-18-011761	11AUG2018	AL	CW

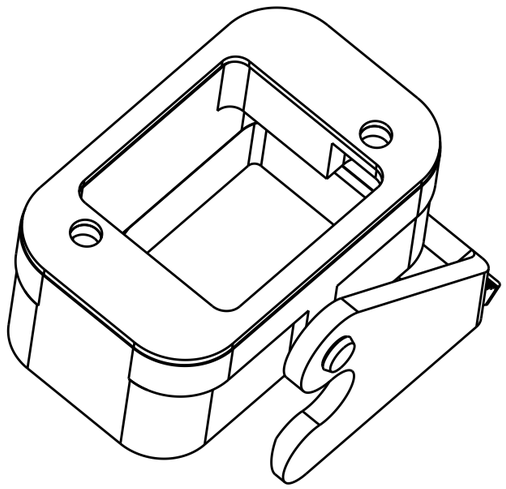

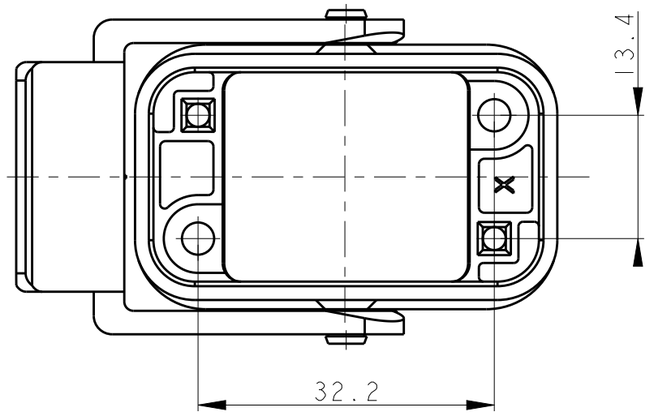

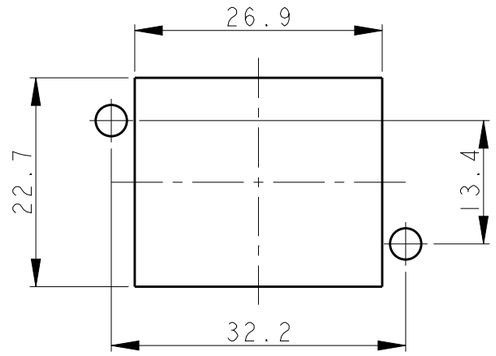

PANNEL CUT OUT

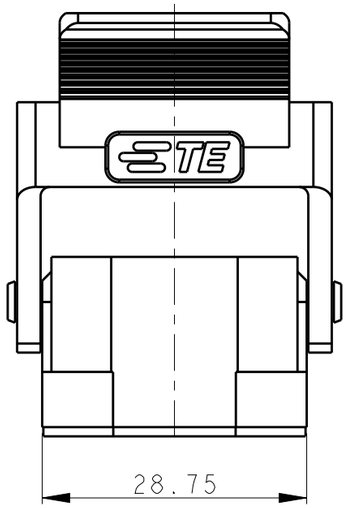

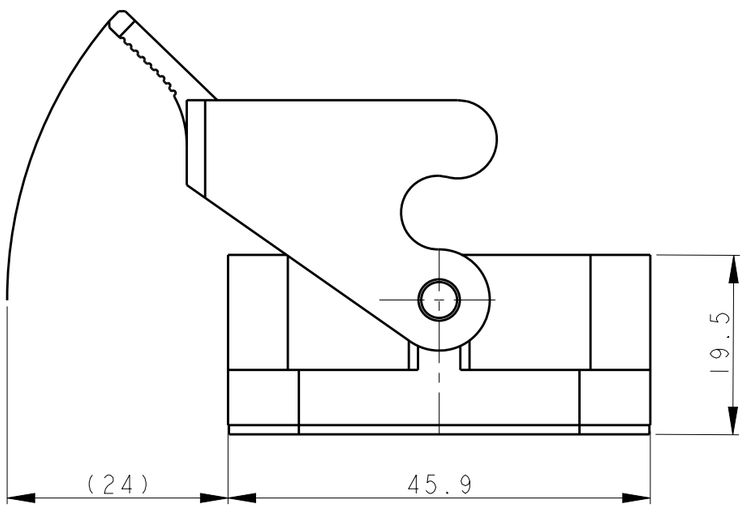

NOTES:
1. TECHNICAL CHARACTERISTICS:
   BODY MATERIAL: PA6
   DEGREE OF PROTECTION: IP65 (MATED)

注释：
1. 技术参数：
   主体材料： PA6
   防护等级： IP65(配合)

PART NUMBER 料号		PART DESCRIPTION 零件描述
T1509081100-000	H8A-AG	H8A PLASTIC HOUSING,BULKHEAD MOUNTED,PLASTIC SINGLE LOCKING,BLACK H8A塑料下壳,开孔安装,塑料单扣,黑色

THIS DRAWING IS A CONTROLLED DOCUMENT.

DIMENSIONS: mm

TOLERANCES UNLESS OTHERWISE SPECIFIED:
0 PLC ±-
1 PLC ±-
2 PLC ±-
3 PLC ±-
4 PLC ±-
ANGLES ±-

MATERIAL - -
FINISH - -

DWN DAVID LI 23APR2015
CHK CHRIS WANG 23APR2015
APVD XU XIANG 23APR2015
PRODUCT SPEC 108-137137
APPLICATION SPEC 114-137137
WEIGHT -

TE Connectivity

NAME H8A-AG

SIZE	CAGE CODE	DRAWING NO	RESTRICTED TO
A3	-	C-T1509081100000	-

CUSTOMER DRAWING | SCALE 3:2 | SHEET 1 OF 1 | REV A1

1470-19 (3/13)