Part Number	CONFIGURATION												
	POS	12	11	10	9	8	7	6	5	4	3	2	1
10126492-X01 OR 10126492-X01LF	D	–	–	–	–	–	–	–	–	–			
	C	–	–	–	–	–	–	–	–	–			
	B	–	–	–	–	–	–	–	–	–			
	A	–	–	–	–	–	–	–	–	–			

Part Number	CONFIGURATION												
	POS	12	11	10	9	8	7	6	5	4	3	2	1
10126492-X02 OR 10126492-X02LF	D	–	–	–	–	–	–	–	–	–	–	–	–
	C	–	–	–	–	–	–	–	–	–	–	–	–
	B	–	–	–	–	–	–	–	–	–	–	–	–
	A	–	–	–	–	–	–	–	–	–	–	–	–

B

SELECTIVE CONTACT LOADING

NOTE: " – " POSITION LOADED

P/N 10126492-XYY/XYYLF	
DASH NUMBER:	PERFORMANCE LEVEL
-1YY/1YYLF	TELCORDIA CO
-2YY/2YYLF	CUSTOMER SPECIAL

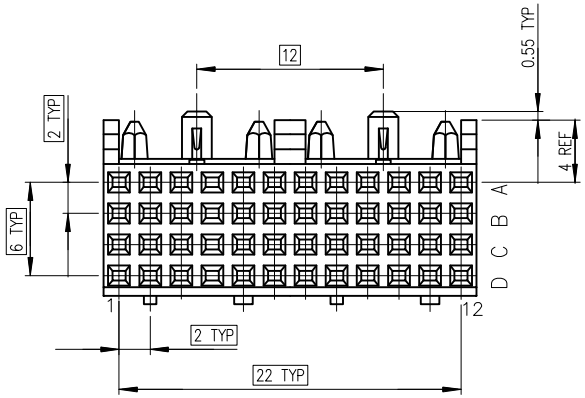

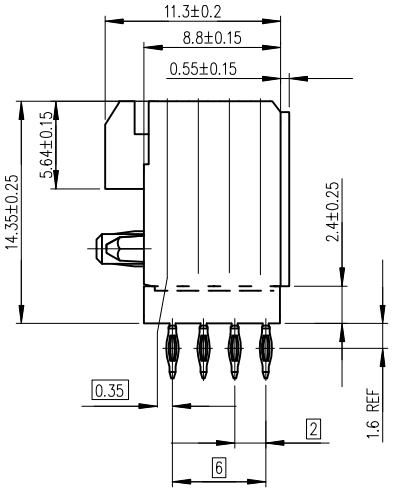

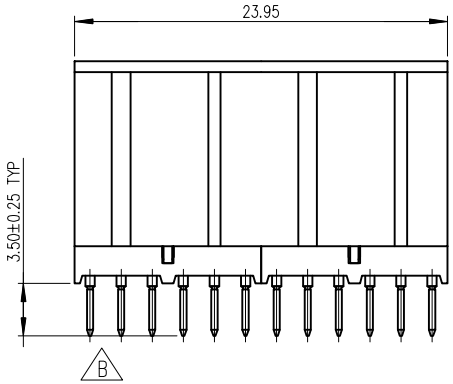

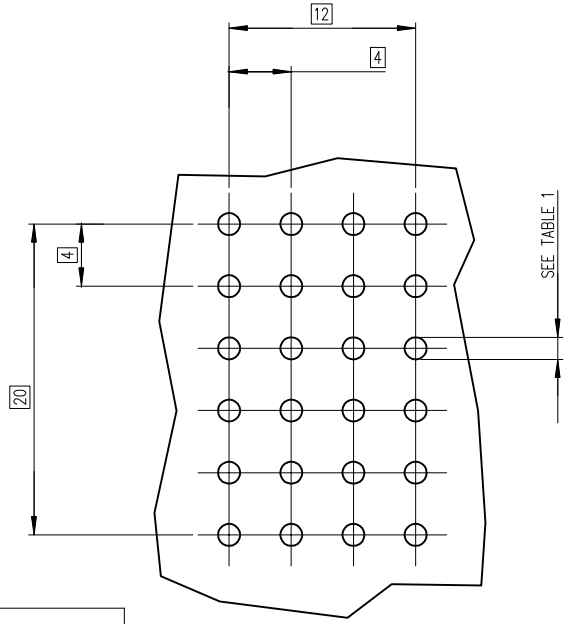

TABLE 1	
PLATED THRU HOLE REQUIREMENTS	
HOLE DIAMETER AFTER PLATING	0.65–0.80
DRILLED HOLE	0.81–0.86 (0.85 DRILL)
COPPER PLATING	0.025 – 0.05
SnPb PLATING	0.005–0.015

LAYOUT FOR P.C.B

scale : 2.0

GENERAL CHARACTERISTICS AND ROHS INFORMATIONS:
SEE GS-12-447

NOTE-1: MORE INFORMATIONS FOR PCB LAYOUT
SEE GS-12-447

rev	ecn no	dr	date
A	NEW RELEASE	QinDF	2013-11-04
B	ELX-DG-19619	MIC	2014-12-03
–	–	–	–
–	–	–	–

www.fciconnect.com

surface ISO 1302 | tolerance std ISO 406 ISO 1101 | projection | mm

TOLERANCES UNLESS OTHERWISE SPECIFIED

Dr	Michael Song	2014/12/03	ANGULAR	LINEAR	0.X ±0.30	size A3
Eng	Michael Song	2014/12/03			0.XX ±0.15	Scale 3
Chr	Zhen Luo	2014/12/03	0.XX° ±2°		0.XXX ±0.10	ECN ELX-DG-19619
Appr	Collins Lu	2014/12/03	Product family	METRAL		Spec ref –

title: METRAL FEM. 4 ROW SL STRAIGHT PRESS FIT
PCB THICKNESS: 2.4 mm MINIMUM

dwg no 10126492 | Rev. B

catalog no – | CUSTOMER | sheet 1 of 1

Copyright FCI.

REV F – 2006-04-17