REV	
A	DT06-4S-C017

REVISIONS

SYM	DESCRIPTION	DATE	APPROVED
NC	NEW RELEASE PER E.O. P18926	8/2/05	R.D.R.
A	REVISED PER E.O. P19376	10-23-06	RDR

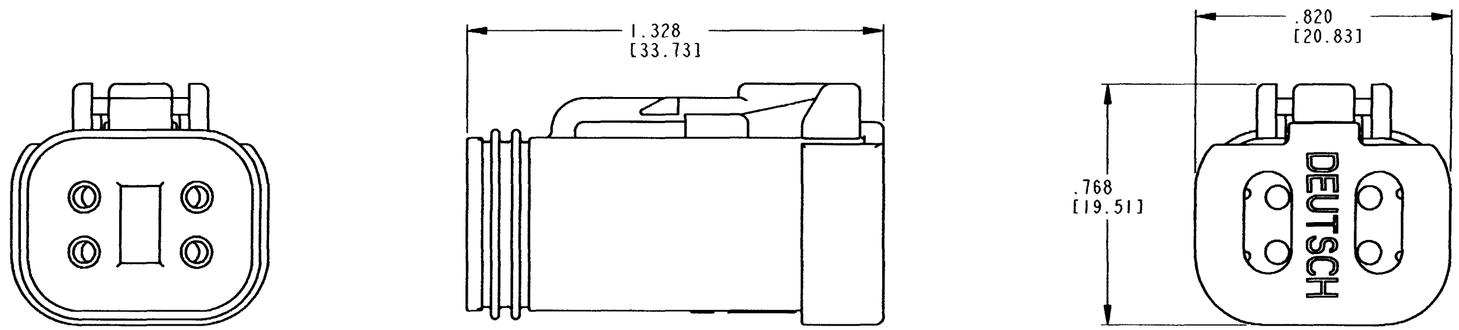

4. MATERIAL: SHELL, WEDGE: PLASTIC; SEAL: RUBBER.
   COLOR: SHELL: GRAY; WEDGE: ORANGE.

3. THIS PLUG MATES WITH THE DT04-4P-**** RECEPTACLE (**** = ALL MODIFICATIONS).
   CONSULT FACTORY FOR MODIFICATIONS.

2. DIMENSIONS ARE ±.025[0.63] UNLESS OTHERWISE SPECIFIED.

1. DIMENSIONS ARE IN INCHES [MILLIMETERS].

NOTES:

	SIGNATURE & DATE
DR	T. YOHANNES 17MAY05
CHK	10/20/06
PE	10/18/06
APPD	10.13.06
SCALE NONE	WT ——

4 WAY PLUG
COLOR: GRAY
-C017 MOD.
DT SERIES

ENVELOPE

EP — MATL. CODE

The Deutsch Company
DEUTSCH I.P.D.
3850 INDUSTRIAL AVE.
HEMET, CALIF. 92545

B — DWG SIZE

DT06-4S-C017

CODE 11139 — SHEET 1 OF 1