CUSTOMER DRAWING		
CATALOG # 6CUFE1		
ECN #	APPRVD.	DATE
08-023523	EC	26DEC08

SAFETY ORGANIZATIONS

THIS FILTER HAS BEEN FORMALLY RECOGNIZED, CERTIFIED OR APPROVED BY THE LISTED AGENCY. THEREFORE, ALL TEST/REQUIREMENTS SPECIFIED IN THE LATEST REVISION OF THE FOLLOWING AGENCY STANDARDS HAVE BEEN MET:

UL RECOGNIZED: UL 1283
CSA CERTIFIED: CSA C22.2, # 8
VDE APPROVED: EN 60939-2

OPERATING SPECIFICATIONS

LINE CURRENT/VOLTAGE: 6 AMP, 120/250 VAC,
6 AMP/40°C, 250 VAC

LINE FREQUENCY: 50-60Hz

MAXIMUM LEAKAGE CURRENT,
EACH LINE TO GROUND: 0.25 mA @ 120V 60Hz
0.40 mA @ 250V 50Hz

OPERATING AMBIENT TEMP. RANGE: -10°C TO +40°C @ RATED CURRENT, I_r.

IN AN AMBIENT, T_a, HIGHER THAN 40°C, THE MAXIMUM OPERATING CURRENT, I_o, IS AS FOLLOWS:

$$I_o = I_r \sqrt{\frac{85 - T_a}{45}}$$

RELIABILITY SPECIFICATIONS:

STORAGE TEMPERATURE: -40°C TO +85°C
HUMIDITY: 21 DAYS @ 40°C 95% RH.
CURRENT OVERLOAD TEST: 6 TIMES I_r FOR 8 SECONDS

TEST SPECIFICATIONS:

INDUCTANCE: 0.82 mH NOMINAL
CAPACITANCE: (MEASURED @ 1KHz, 0.250VAC MAX., 25°C±1°C)
LINE TO GROUND: 0.0028 µF ±20%
LINE TO LINE: 0.1000 µF ±20%
DISCHARGE RESISTOR: 3.3 MΩ
L/G AND L/L I.R.
NO DISCHARGE RESISTOR: 6000MΩ (MIN.) @ 100VDC, 20°C AND 50% RH

RECOMMENDED RECEIVING INSPECTION HIPOT:

LINE TO GROUND: 1500 VAC FOR 1 MINUTE
LINE TO LINE: 1450 VDC FOR 1 MINUTE

FILTER APPROVAL:

THE BEST WAY TO SELECT AND QUALIFY A FILTER IS FOR YOUR ENGINEERING TO TEST THE UNIT IN YOUR EQUIPMENT.

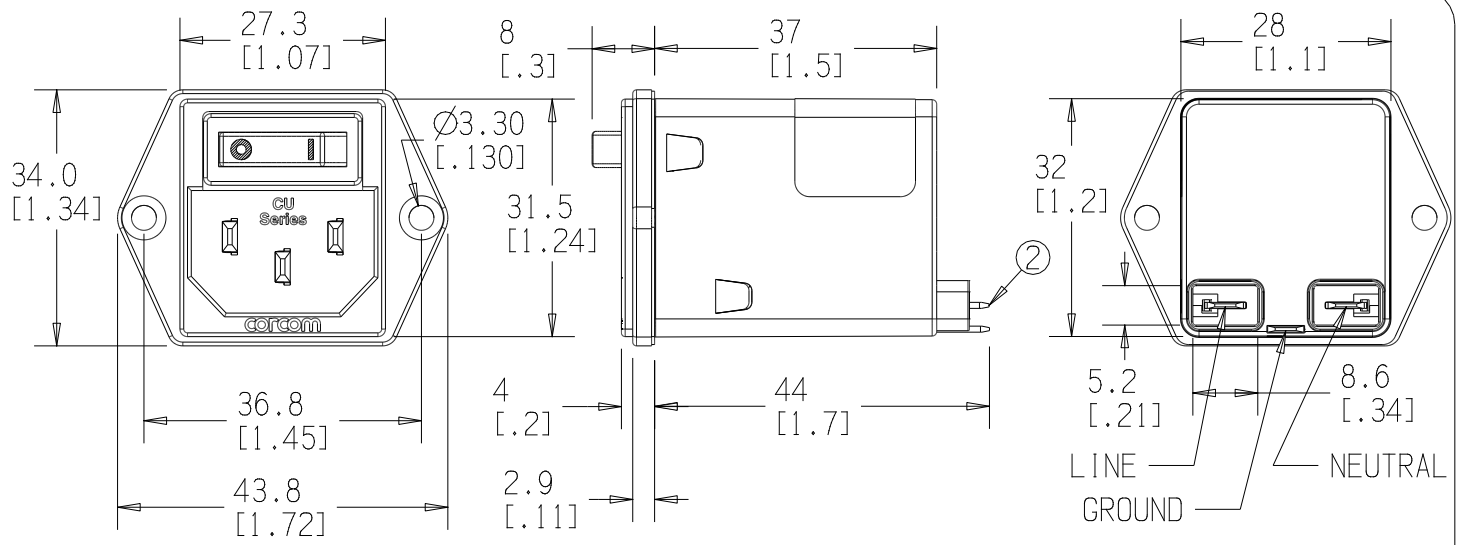

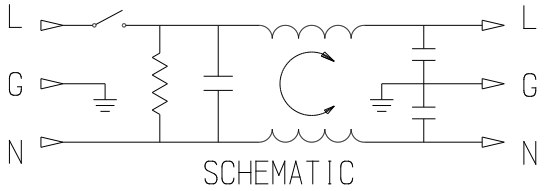

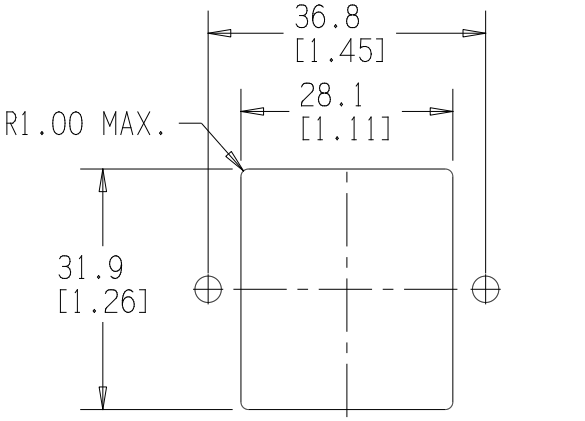

RECOMMENDED PANEL CUTOUT ±0.1 MM

NOTES:
1. SOCKET COMPLIES WITH EN 60320-1.
②. LOAD TERMINALS COMPLY WITH DIN 46244, 4.8MM X 0.8MM.

50 Ω - 50 Ω (MINIMUM) INSERTION LOSS

FREQUENCY MHz	.05	.15	.5	1	5	10	30	/	/	/	/	/
COMMON dB	5	14	28	34	43	43	48	/	/	/	/	/
DIFF. dB	1	10	20	23	38	41	65	/	/	/	/	/

PARTS SHALL COMPLY WITH TYCO ELECTRONICS 230-702 SPECIFICATION FOR HAZARDOUS SUBSTANCES

UNLESS OTHERWISE SPECIFIED
TOLERANCE TO BE ±0.5 MM
MATERIAL & FINISH: AS SUPPLIED

DIMENSIONS ARE:
MILLIMETER
(INCH)

CVM AVAILABLE	YES	NO
	X	

G:\KeyCreator Directories\CD 6CUFE101.ckd

Tyco Electronics
CORCOM PRODUCTS, 620 S. BUTTERFIELD RD. MUNDELEIN IL 60060

POWER LINE FILTER

TYCO ELECTRONICS PART NO. 2-1609113-4

SCALE: 1:1	DATE: 30DEC08	DRAWING NUMBER: 6CUFE1	REV. 1
DRW. BY: EC	DRIG: EC		

SHEET SIZE A

THIRD ANGLE PROJECTION

THIS INFORMATION IS CONFIDENTIAL AND PROPRIETARY TO TYCO ELECTRONICS CORPORATION AND ITS WORLDWIDE SUBSIDIARIES AND AFFILIATES. IT MAY NOT BE DISCLOSED TO ANYONE OTHER THAN TYCO ELECTRONICS PERSONEL, WITHOUT WRITTEN AUTHORIZATION FROM TYCO ELECTRONICS CORPORATION. HARRISBURG, PENNSYLVANIA USA.