IEC Appliance Inlet C6 with Line Switch 1- or 2-pole

Snap-in version

C6

70° C

Description
- Panel Mount :
  Snap-in version , from front side
- Appliance Inlet , Pin temperature 70 °C , Protection class I ,
- Line Switch 1- or 2-pole
- Solder terminals or quick connect terminals

Approvals
- VDE Certificate Number: 40002273
- CSA File Number: 1020538

Characteristics
- Line switch non-illuminated or illuminated

References
We recommend for new applications the type CMF3, CMF6
Last order date: 31.12.2016

Weblinks
pdf datasheet, html-datasheet, General Product Information, RoHS, CHINA-RoHS, REACH, Distributor-Stock-Check, Accessories, Detailed request for product

Technical Data

Ratings IEC	2.5 A / 250 VAC; 50 Hz
Ratings UL/CSA	2.5 A / 250 VAC; 60 Hz
Dielectric Strength	> 2.5 kVAC between L-N > 3 kVAC between L/N-PE (1 min/50 Hz)
Allowable Operation Temperature	-25 °C to 70 °C
IP-Protection	from front side IP 20 acc. to IEC 60529
Insulation cover	Suitable for appliances with protection class I acc. to IEC 61140
Terminal	Solder terminals or quick connect terminals
Panel Thickness s	Snap-in: 1/1.5/2/2.5/3 mm
Material: Housing	PA6, black, UL 94V-0

appliance inlet/-outlet	C6 acc. to IEC 60320-1 UL 498, CSA C22.2 no. 42 (for cold conditions) pin-temperature 70 °C, 2.5 A, Protection Class I
Line Switch	Rocker switch 1 or 2 pole, non-illuminated or illuminated, acc. to IEC 61058-1 Technical Details

Detailed information on product approvals, code requirements, usage instructions and detailed test conditions can be looked up in General Product Information

PHASE-OUT

Dimensions

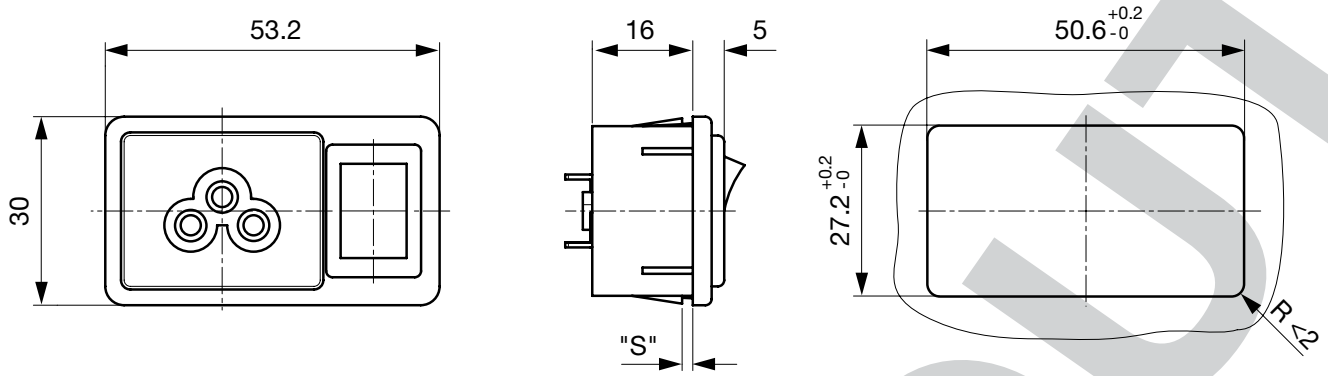

Length of the terminal please find at the order code configuration table

Dimension "S" please ref. to table order code

Config. Code

2565 - H - A B C N - D - E G P

The characters are placeholders for the correspondingly keys of selections from the key tables.

2565 - **H** - A B C N - D - E G P = Type

Type	Configuration key
combination frame	K

2565 - H - **A** B C N - D - E G P = Terminals

Terminal L		Configuration key
short solder terminal (L = 4.8 mm)		2
long solder terminal (L = 8.5 mm)		3
Blade terminal (2.8 x 0.8 mm)		7
Blade terminal (4.8 x 0.8 mm)		8

2565 - H - A **B** C N - D - E G P = Terminals

Terminal N	Configuration key
short solder terminal (L = 4.8 mm)	2
long solder terminal (L = 8.5 mm)	3
Blade terminal (2.8 x 0.8 mm)	7
Blade terminal (4.8 x 0.8 mm)	8

Symbols similar as in table A

2565 - H - A B **C** N - D - E G P = Terminals

Terminal Ground	Configuration key
short solder terminal (L = 4.8 mm)	2
long solder terminal (L = 8.5 mm)	3
Blade terminal (2.8 x 0.8 mm)	7
Blade terminal (4.8 x 0.8 mm)	8

Symbols similar as in table A

2565 - H - A B C **N** - D - E G P = Terminal Fuseholder

Terminal Fuseholder	Configuration key
no fuseholder	0

2565 - H - A B C N - **D** - E G P = Color

Color	Configuration key
Black	A

2565 - H - A B C N - D - **E** G P = Style

Style	Configuration key
snap-in (s=panel thickness)	4

2565 - H - A B C N - D - E **G** P = Mass S

Mass "s"	Configuration key
10	

The dimension "S" is dispalyed in ($^1/_{10}$ mm). This information is also valid for the order code

EXCLUDED-OUT

Mass "s"	Configuration key
15	
20	
25	
30	

The dimension "S" is dispalyed in ($^{1}/_{10}$ mm). This information is also valid for the order code

2565 - H - A B C N - D - E G **P** **= Switches**

Switches	Configuration key
unipolar switch, 4,8mm blade terminal, black rocker	2
unipolar switch, solder terminal, black rocker	3
bipolar switch, 4,8mm blade terminal, black rocker	4
bipolar switch, solder terminals, black rocker	5
bipolar switch, 4,8mm blade terminal, rocker red illuminated	6
bipolar switch, solder terminal, rocker red illuminated	7
bipolar switch, 4,8mm blade terminals, rocker green illuminated	8
bipolar switch, solder terminals, rocker green illuminated	9

All Variants

Config. Code	Description	Order Number
2565-K-2220-A-4155	2565, IEC Power Entry Module C6, 70°C, , version: I, L: short solder terminal (L = 4.8 mm), N: short solder terminal (L = 4.8 mm), ground: short solder terminal (L = 4.8 mm), color: Black, design: snap-in (s=panel thickness), dimension S: 15, bipolar switch, solder terminals, black rocker	4304.6044
2565-K-2220-A-4158	2565, IEC Power Entry Module C6, 70°C, , version: I, L: short solder terminal (L = 4.8 mm), N: short solder terminal (L = 4.8 mm), ground: short solder terminal (L = 4.8 mm), color: Black, design: snap-in (s=panel thickness), dimension S: 15, bipolar switch, 4,8mm blade terminals, rocker green illuminated	4304.6327

The listet variants should be available from stock Other versions on request www.schurter.com/contact

Availability for all products can be searched real-time:http://www.schurter.com/en/Stock-Check/Stock-Check-SCHURTER

Packaging unit 100 Pcs

Mating Outlets/Connectors

Category / Description

Power Supply Cord Overview complete

Cord Sets 2.5 A, Europlug, 2.0 m, Connector IEC C5, H05VV-F3G0.75, black	6052.0042

Power Supply Cord further types to 2565-K

PHASE OUT

07.03.2017

The specifications, descriptions and illustrations indicated in this document are based on current information. All content is subject to modifications and amendments. Information furnished is believed to be accurate and reliable. However, users should independently evaluate the suitability and test each product selected for their own applications.