THIS DRAWING IS UNPUBLISHED. RELEASED FOR PUBLICATION - ,- .
© COPYRIGHT - By - ALL RIGHTS RESERVED.

LOC	DIST
—	—

REVISIONS

P	LTR	DESCRIPTION	DATE	DWN	APVD
	B2	REVISED PER ECO-14-000329	09JAN2014	NK	RH

		DIMENSION A	DIMENSION B	DIMENSION C	DIMENSION D	OPERATING FORCE	PART NUMBER	TYPE	MARK:A	MARK:B	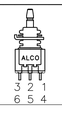 3 2 1 / 6 5 4	ACTUATED 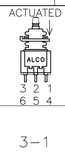 3 2 1 / 6 5 4
	ON-ON	.098 [2.5]	.331 [8.4]	.744 [18.9]	.098 [2.5]	6	1977738-1 MPS1004DPC	SPDT	MPS1004D ALCO	DC 60mA 30V ON ON C	3-2	3-1
MOMENTARY	ON-(ON)	.039 [1]	.315 [8]	.685 [17.4]	.039 [1]	8	1977738-2 MPS1004FPC		MPS1004F ALCO	DC 60mA 30V NO NC C		(3)-(1)
	ON-ON	.098 [2.5]	.331 [8.4]	.744 [18.9]	.098 [2.5]	7	1977738-3 MPS2004NPC	DPDT	MPS2004N ALCO	DC 60mA 30V ON ON C	3-2 6-5	3-1 6-4
MOMENTARY	ON-(ON)	.039 [1]	.315 [8]	.685 [17.4]	.039 [1]	9	1977738-4 MPS2004RPC		MPS2004R ALCO	DC 60mA 30V NO NC C		(3)-(1) (6)-(4)

NOTE: TERMINALS 4,5,6 ARE FOUND ONLY ON DP VERSIONS (-3, -4)

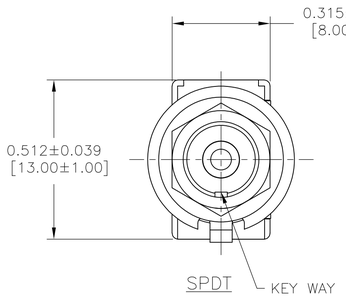

SPDT

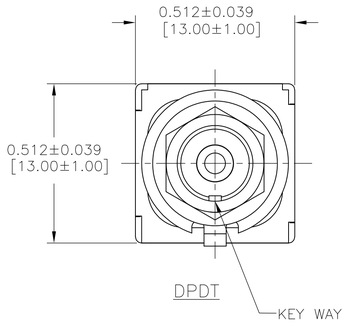

DPDT

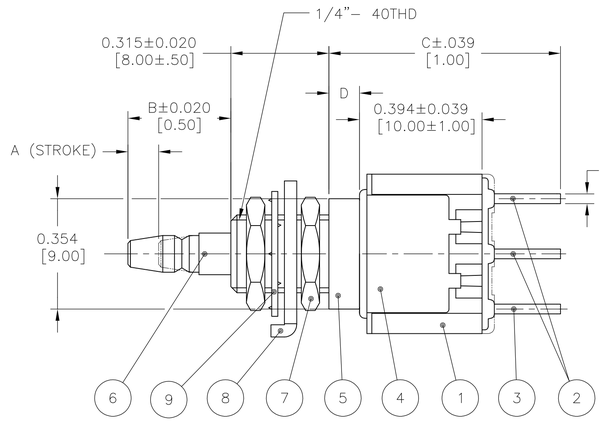

TERMINAL FORM

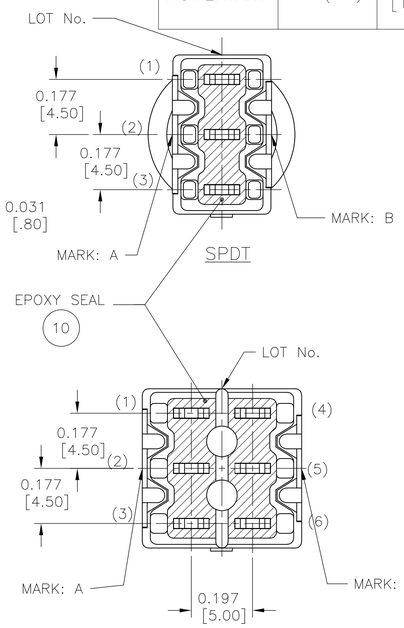

SPDT

DPDT

SPECIFICATIONS:

1 RATING: MIN, 1μa 20mV DC; MAX, 60mA 30V DC (RESISTIVE LOAD)

2 INITIAL CONTACT RESISTANCE: 20mΩ MAX. AT 5mA 0.2mV AC.

3 INITIAL INSULATION RESISTANCE: 1,000MΩ MIN. AT 500V DC. (BETWEEN TERMINALS AND TERMINAL-GROUND)

4 INITIAL DIELECTRIC STRENGTH: 1,000V AC FOR 1 MINUTE. (BETWEEN TERMINALS AND TERMINAL-GROUND)

5 DURABILITY: 50,000 CYCLES

OPERATING FORCE:

6 3.92±1.96N.(400±200gf)

7 $4.9^{+2.94}_{-1.96}$N.(500^{+300}_{-200}gf)

8 2.94±0.98N.(300±100gf)

9 $4.9^{+1.96}_{-0.98}$N.(500^{+200}_{-100}gf)

10 OPERATING TEMP: -20 ~ +85°C
STORAGE TEMP: -40 ~ +85°C

11 ALL MATERIALS AND FINISHES SHALL COMPLY WITH EU DIRECTIVE 2002/95/EC OF 27JAN2003 (ROHS).

12 LASER MARKING USED FOR MARKS.

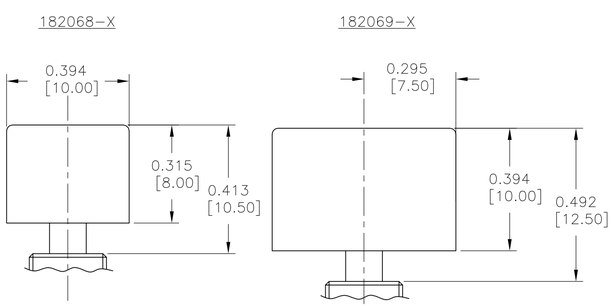

BUTTON CAP

SOLD SEPARATELY
SEE DRAWINGS 1825068 (ø.394 [10 MM])
& 1825069 (ø.591 [15 MM])
FOR COLOR CHOICES

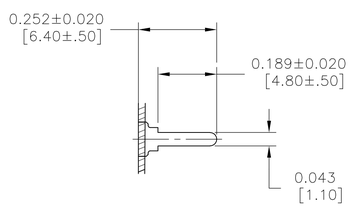

PANEL CUT-OUTS (REF)

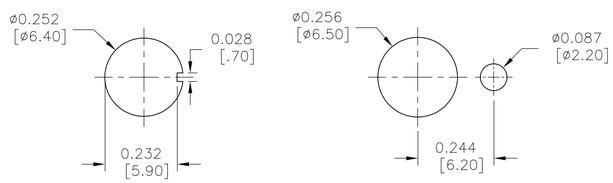

WITHOUT LOCKING RING
MAXIMUM PANEL THICKNESS:
.118 [3mm]

WITH STANDARD LOCKING RING
MAXIMUM PANEL THICKNESS:
.079 [2mm]

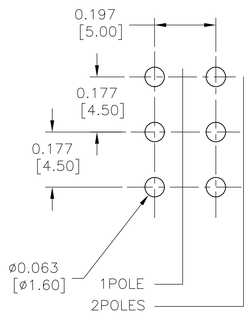

PC BOARD DRILLING

QTY 2 POLES	QTY 1 POLE	FINISH (COLOR)	MATERIALS	PARTS	NO
A/R	A/R	BLUE	-	EPOXY	10
1	1	ZINC PLATE	CARBON TOOL STEEL	TOOTH WASHER	9
1	1	ZINC PLATE	COLD ROLLED STEEL	LOCATING RING	8
2	2	NICKEL PLATE	BRASS	HEX NUT	7
1	1	NICKEL PLATE	BRASS	PLUNGER	6
1	1	NICKEL PLATE	BRASS	MOUNTING SLEEVE	5
1	1	-	STAINLESS STEEL	FRAME	4
2	1	GOLD PLATE	BRASS	COMMON TERMINAL	3
4	2	GOLD PLATE	BRASS	FIXED CONTACT	2
1	1	(BLUE)	EPOXY RESIN	CASE	1

THIS DRAWING IS A CONTROLLED DOCUMENT.

DIMENSIONS: INCHES [mm]

TOLERANCES UNLESS OTHERWISE SPECIFIED:
0 PLC ± -
1 PLC ± -
2 PLC ± -
3 PLC ± .010 [.25]
4 PLC ± -
ANGLES ± -

MATERIAL -
FINISH -

DWN RAGHAVENDRA 28JAN11
CHK EPPLEY NAZ 28JAN11
APVD EPPLEY NAZ 28JAN11
PRODUCT SPEC —
APPLICATION SPEC —
WEIGHT —

TE Connectivity

NAME: MPS SERIES PUSHBUTTON, DRY CIRCUIT MPS1004 (SPDT) & MPS2004 (DPDT) PCB TERMINATION

SIZE	CAGE CODE	DRAWING NO	RESTRICTED TO
A1	00779	C-1977738	—

CUSTOMER DRAWING | SCALE 4:1 | SHEET 1 OF 1 | REV B2

4805 (3/11)