THIS DRAWING IS UNPUBLISHED. RELEASED FOR PUBLICATION -,- .
© COPYRIGHT - By - ALL RIGHTS RESERVED.

LOC	DIST
GP	00

REVISIONS

P	LTR	DESCRIPTION	DATE	DWN	APVD
	G	REVISED PER ECO-13-001881	02APR2013	LJC	T.T

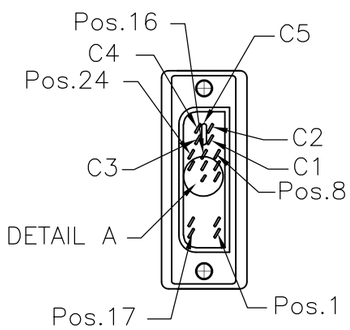

P1

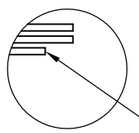

SIDE VIEW OF DETAIL A

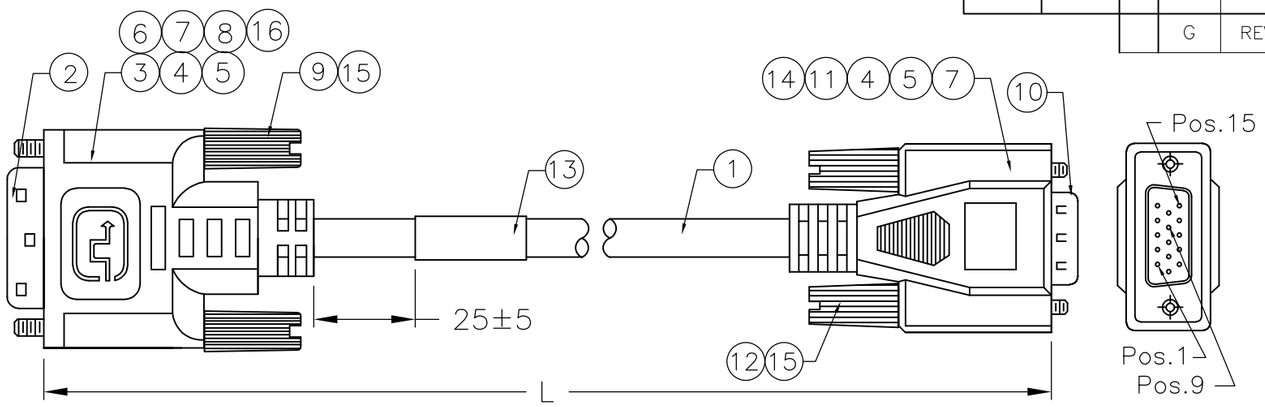

P2

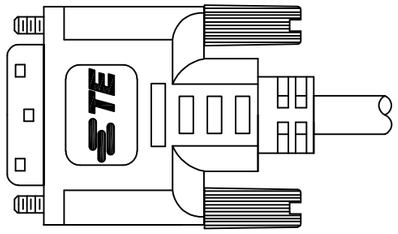

BACK SIDE

LENGTH(L)	CUSTOMER P/N	TE P/N
3000±80		1653932-3
2000±60		1653932-2
1000±30		1653932-1

TE P/N
YYWW
MADE IN CHINA

LABEL

				DESCRIPTION	ITEM
AR	AR	AR	MR	UL TAPE, BLACK	16
AR	AR	AR	KG	PVC, Shore A 95±3, Color: White (WH03).	15
AR	AR	AR	MR	Copper Foil, W: 30mm.	14
1	1	1	PC	Label, Size: 25.0*35.0, White: 25.0*13.0mm.	13
2	2	2	PC	#4-40 Screw, L=43mm	12
AR	AR	AR	KG	Inner Molded PE	11
1	1	1	PC	HDDB15, Male, Solder Type, Contact: Gold Flash	10
2	2	2	PC	DVI #4-40 3*45mm Thumbscrew.	9
AR	AR	AR	MR	Copper Foil, W:8mm.	8
AR	AR	AR	KG	PVC, Shore A 90±3, Color: White (WH03).	7
AR	AR	AR	g	Solder Wire	6
AR	AR	AR	MR	Heat Shrink Tubing, OD:2.5mm, Color: Black.	5
AR	AR	AR	MR	Heat Shrink Tubing, OD:1.5mm, Color: Black.	4
1	1	1	PC	Metal Can For DVI Connector, Meet OD: 7.4mm	3
1	1	1	PC	DVI-A Connector, Gold Flash	2
AR	AR	AR	MR	UL20276 30AWG*3Coax.+28AWG*1Pair +28AWG*5C+Al/Mylar+Braid, Color: Black(BK01)	1
-3	-2	-1	U/M		

NOTES:

1. CABLE SHALL BE TESTED WITH AUTOMATED TEST EQUIPMENT FOR THE FOLLOWING:
   A. CONNECTION RESISTANCE SHALL NOT EXCEED 1.8 OHMS.
   B. INSULATION RESISTANCE 100 MEGOHMS, MIN.
   C. HIPOT-300 VOLTS AT 0.01 SEC.
2. CABLE ASSEMBLY MUST PASS DVI 1.0 SPECIFICATION.
3. DIRECTIVE 2002/95/EC COMPLIANT.
4. 100% DISPLAY-SCREEN FUNCTIONAL TESTING

PIN ASSIGNMENT :

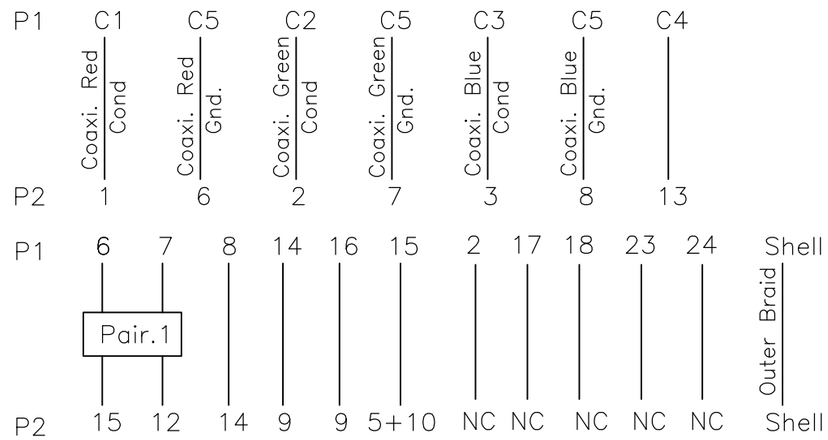

THIS DRAWING IS A CONTROLLED DOCUMENT.

DIMENSIONS: mm

TOLERANCES UNLESS OTHERWISE SPECIFIED:
0 PLC ±-
1 PLC ±-
2 PLC ±-
3 PLC ±-
4 PLC ±-
ANGLES ±-

MATERIAL -

FINISH -

DWN JURRY LIU	22JAN03	
CHK MONTGOMERY, JOHN D	15JUN04	
APVD MONTGOMERY, JOHN D	15JUN04	
PRODUCT SPEC —		
APPLICATION SPEC —		
WEIGHT —		

TE Connectivity

NAME DVI-A TO VGA CABLE ASSEMBLY
—

SIZE	CAGE CODE	DRAWING NO	RESTRICTED TO
A3	00779	C-1653932	—

CUSTOMER DRAWING | SCALE N.T.S | SHEET 1 OF 1 | REV G