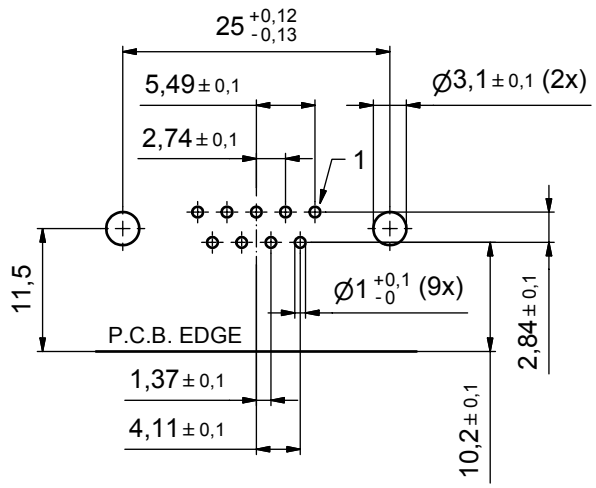

P.C.B. HOLE DRILLINGS

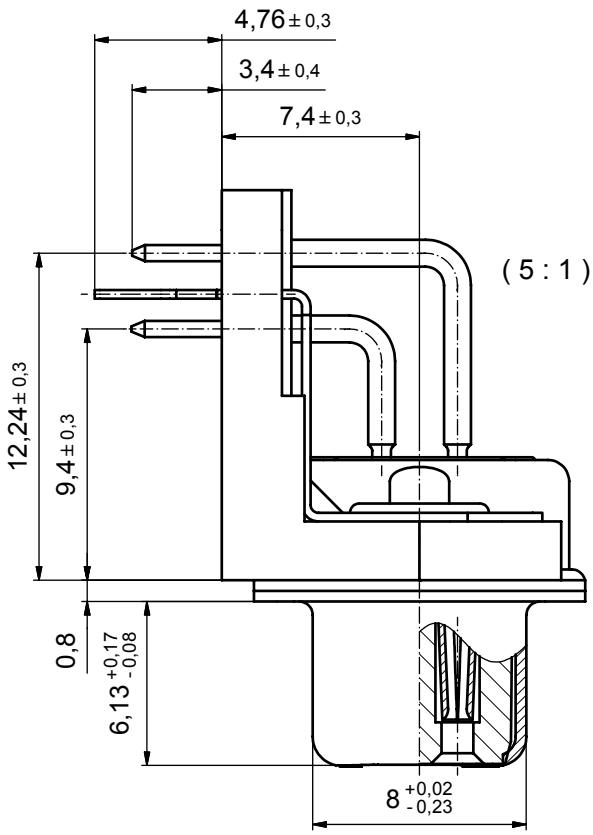

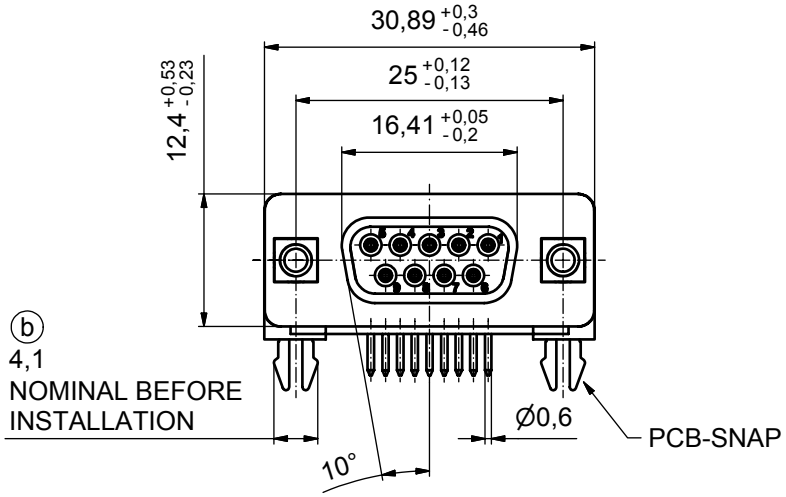

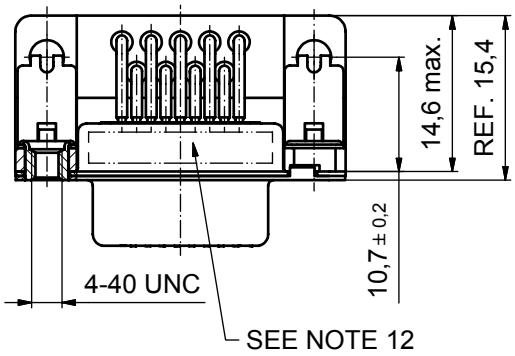

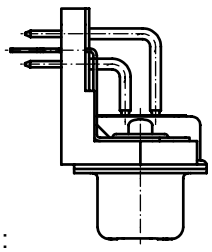

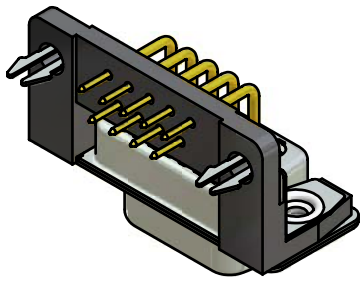

Directive 2002/95/EC „RoHS" Compliant

NOTES:

1. RoHS COMPLIANT
2. SUITABLE FOR WAVESOLDERING
3. METALSHELLS: STEEL; min. 315µin TIN over 40-80µin NICKEL
4. INSULATORS: HIGH TEMPERATURE PLASTIC UL 94 V-0, BLACK
5. CONTACTS: COPPER ALLOY
   PLATING: 8µin HARD GOLD over min. 50µin NICKEL
   CONTACT TAILS PRETINNED
6. MOUNTING BRACKET: PBT GF UL 94 V-0; BLACK
7. THREADED INSERT: COPPER ALLOY; min. 200µin TIN over 80µin NICKEL
8. GROUNDING-CLIP: COPPER ALLOY
   PCB-HOLE: ⌀3,1±0,1; PCB THICKNESS 1,6mm
9. CAPACITANCE: 1300pF±20%
10. DIELECTRIC WITHSTANDING VOLTAGE: 424 VDC
11. MAXIMUM TORQUE VALUE FOR THREAD: 6 in.LB
12. CONNECTOR IS PART MARKED: 242A12860X CONEC ABC

APPROVAL # FREIGABE # DEBLOCAGE # AUTORIZACION # APPROVAL

CUSTOMER APPROVAL DATE:

NAME: TITLE:

COMPANY NAME:

APPROVAL # FREIGABE # DEBLOCAGE # AUTORIZACION # APPROVAL

THIS DRAWING MAY NOT BE COPIED OR REPRODUCED IN ANY WAY, AND MAY NOT BE PASSED ON TO A THIRD PARTY WITHOUT WRITTEN PERMISSION. OWNERSHIP AND COPYRIGHT OF CONEC GmbH

DO NOT ALTER CAD DRAWING BY HAND

rev.	description	date	name
2 x b	Ä 2772	15.08.07	Lehm.
a	Origin		

tolerance — dim. in mm

	date	name
drawn	01.03.96	Barcinski
appd.	01.03.96	Mickenbecker
norm	DIN 41652	
d-old		

CONEC®

scale: 2:1 (5:1)

material: SEE NOTES

title: D-SUB FILTER FEMALE 90°
9pos. SOLDER PIN ANGLED 0.370inch
threaded insert, mounting bracket, grounding clip

dwg no: 16K1IU1A

Inventor 10 ⓑ

DIN-A3

sh: 1

part no: 242A12860X