DESIGNED FOR USE WITH .085 S.R.	
CABLE ENTRY DIAMETER MINIMUM	
CLAMP NUT	.089
SLEEVE	.064
CONTACT	.021

REVISIONS			
REV	DESCRIPTION	DATE	APPROVED
01_0	RELEASED	11-3-97	KYLE

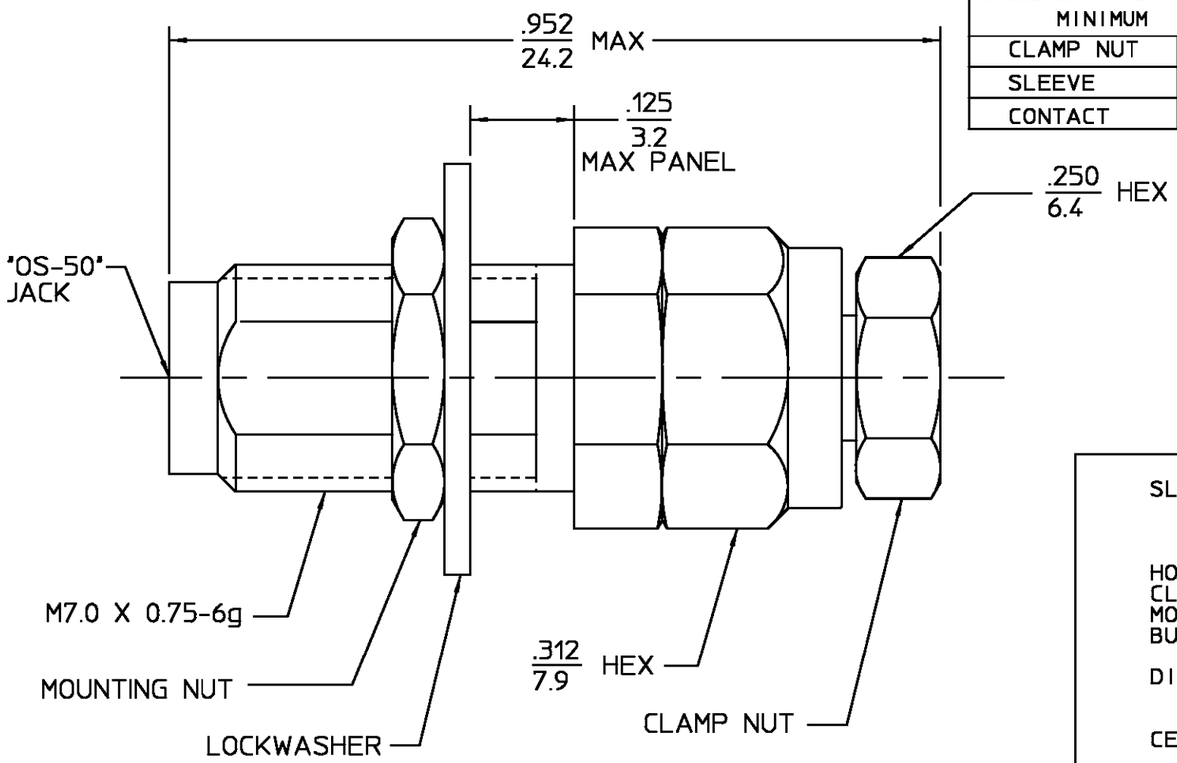

RECOMMENDED MOUNTING HOLE

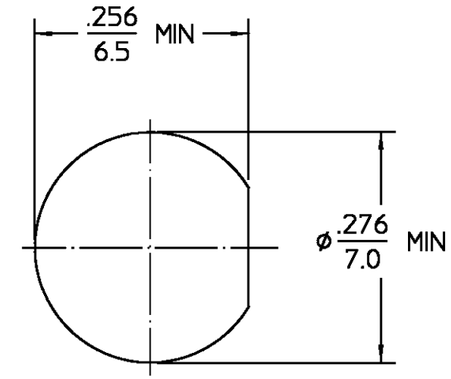

COMPONENT	MATERIAL	FINISH
SLEEVE	STAINLESS STEEL PER ASTM-A484 AND ASTM-A582, TYPE 303	GOLD PLATE PER MIL-G-45204
HOUSING CLAMP NUT MOUNTING NUT BUSHING	STAINLESS STEEL PER ASTM-A484 AND ASTM-A582, TYPE 303	PASSIVATE PER QQ-P-35
DIELECTRIC	PTFE FLUOROCARBON PER ASTM-D-1457	N/A
CENTER CONTACT	BERYLLIUM COPPER PER ASTM-B-196 OR ASTM-B-197, ALLOY C17300, CONDITION H	GOLD PLATE PER MIL-G-45204
LOCKWASHER	BERYLLIUM COPPER PER ASTM-B-196, ALLOY C17300, CONDITION H	GOLD PLATE PER MIL-G-45204
CAP	VINYL PLASTIC	N/A

NOTES:

1. CAPTURED CENTER CONTACT

.XXX = in
XX.X = mm (REF)

UNLESS OTHERWISE SPECIFIED DIMENSIONS ARE IN INCHES

FRAC.	DEC.	ANGLES
± 1/64	±.005	± 1°

DRAWN BY KYLE LE DATE 11-3-97
CHECKED BY
APP'D BY

AMP

AMP Incorporated
140 Fourth Avenue
Waltham, MA 02451-7599

These drawings and specifications are the property of M/A COM Interconnect Div. and shall not be reproduced or copied or used in whole or in part as the basis for the manufacture or sale o f item(s) without written permission.

USE ASS'Y PROCEDURE

408-04616
(85-002)

NO. A.P._____

TITLE "OS-50" BULKHEAD FEEDTHRU CABLE JACK CLAMP ATTACHMENT

SIZE	CODE IDENT NO.		REV
B	26805	1250-2734-02	01_0

SCALE 6:1 SHEET 1 OF 1

DESIGN CONTROL REQUIRED

CUSTOMER DRAWING

AMP PART # 1083600-1
SHEET 1 OF 1 REV A