2.9x3.5
Side Push / Vertical Push Type

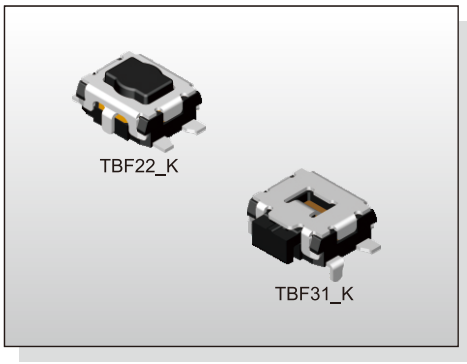

FEATURES
※Miniature 2.9x3.5mm
※Vertical or side actuation
※Long operating life

APPLICATION
※Mobile phone
※Consumer electronics
※Automotive

SPECIFICATION

Contact Rating	10μA, 2V DC to 20mA, 15V DC
Contact Resistance	100mΩ max.
Insulation Resistance	100MΩ min. 100V DC
Dielectric Strength	250V AC/1 minute
Operating Force	100±50/160±50/240±80/350±100gf (Vertical Push)
	160+70/-40, 220+80/-70gf (Side Push)
Travel	0.15mm (Vertical Push)
	0.20mm (Side Push)
Operating Life	100,000 cycles for Side Push
	200,000 cycles for 160/240/350gf 1,000,000 cycles for 100gf (Vertical Push)
Operating Temp.	-40°C ~ +85°C
Storage Temp.	-40°C ~ +85°C

HOW TO ORDER

T B F □ □ □ □ □ Q R

- Q R: Package: Tape & Reel; Halogen Free
- □: Color Stem: K=Black, W=White
- □: Operating Force: 1=100gf (For Vertical Push), 2=160gf, 3=220gf (For Side Push), 4=240gf (For Vertical Push), 5=350gf (For Vertical Push)
- □: Height For Vertical Push: 1=Side Push, 2=Vertical Push H:1.70mm
- □: □=Without Post, P=With Post
- □: 1=With Ground Pin & J Bend, 2=With Ground Pin & Flat, 3=With Ground Pin & 2 Flat & Through Hole (For Side Push), L=J Bend, F=Flat, D=2 Flat & Through Hole (For Side Push)

CIRCUIT

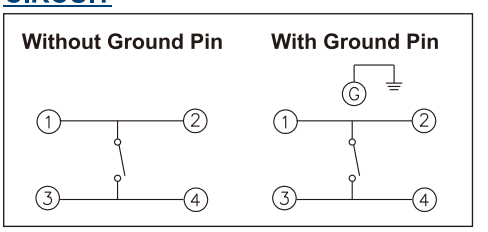

PACKAGE
<Tape & Reel>
3000 pcs

TBF31□

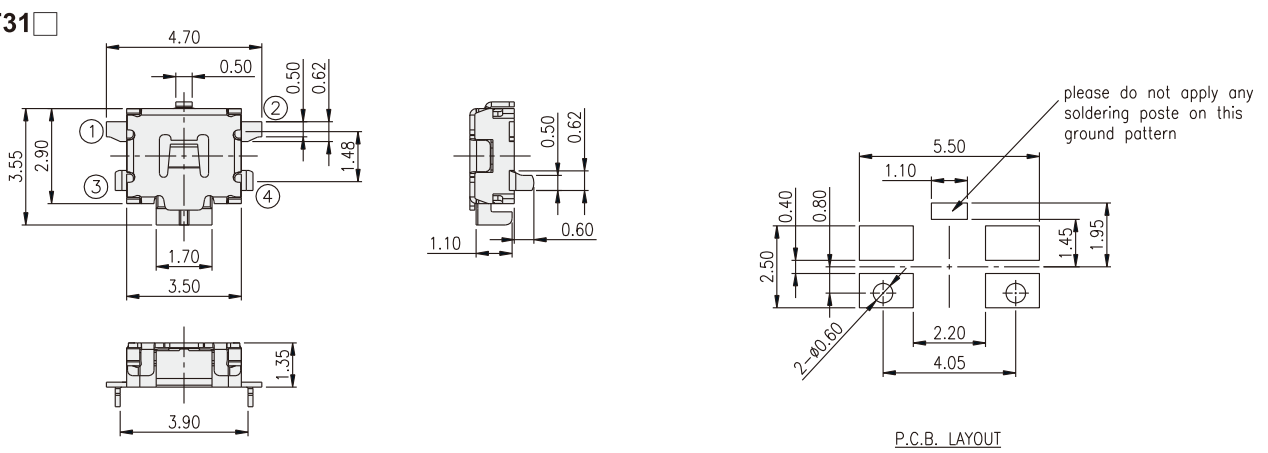

TBFFP1□

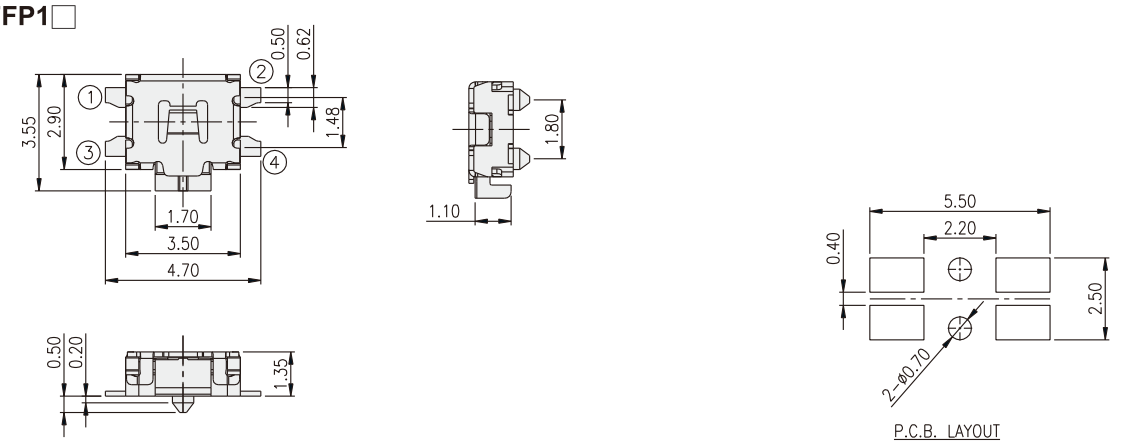

2.9x3.5
Side Push / Vertical Push Type

TBF12□

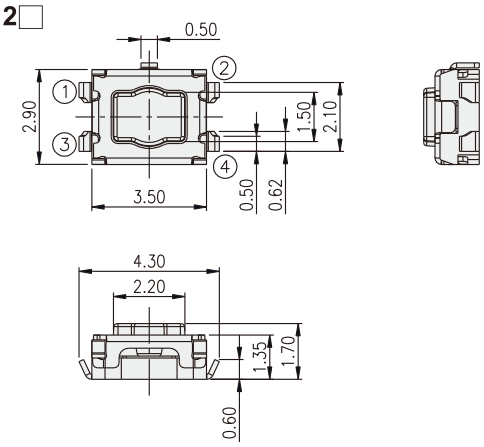

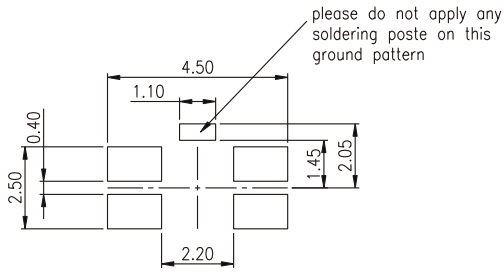

P.C.B. LAYOUT

TBFF2□

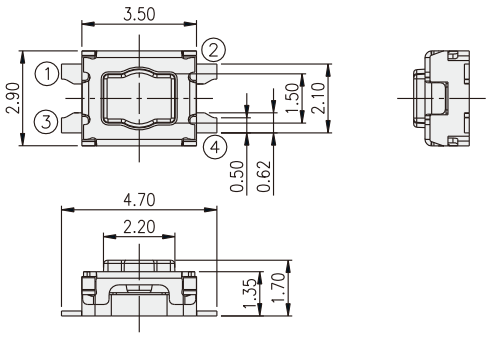

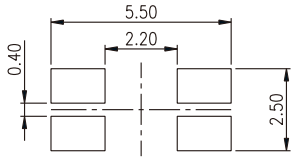

P.C.B. LAYOUT