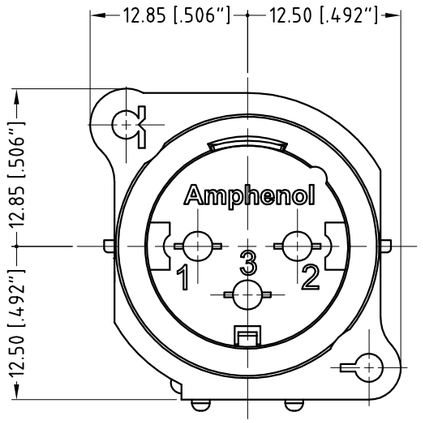

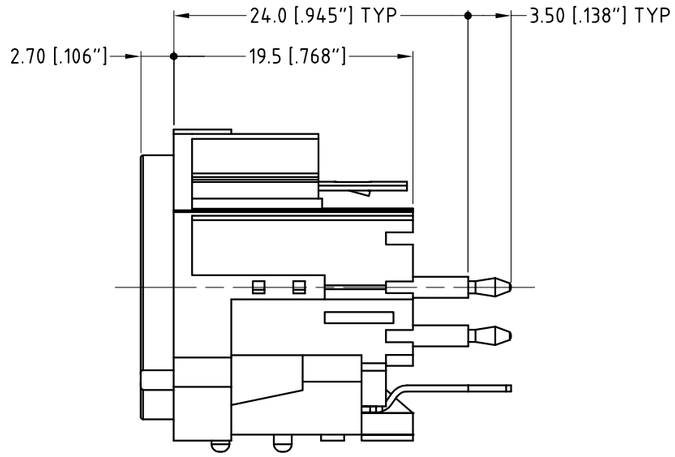

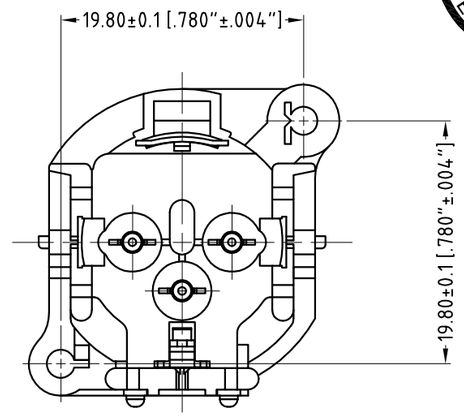

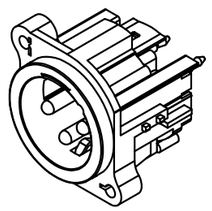

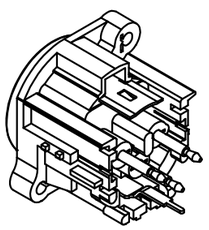

ISO VIEW

SCALE 1:1

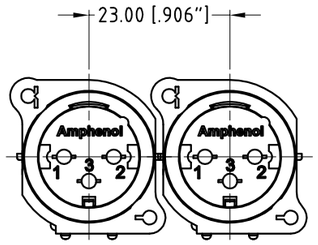

MIN MOUNTING PITCH

SCALE 1:1

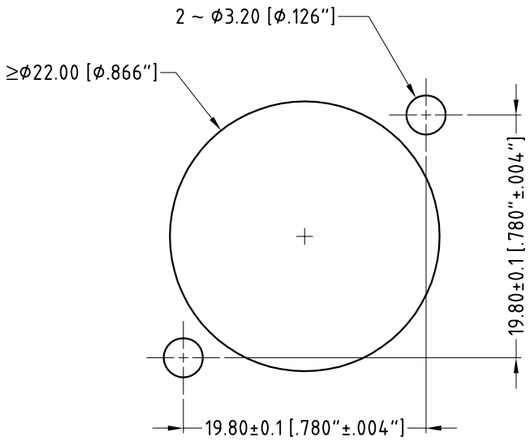

PANEL CUT OUT

REAR VIEW

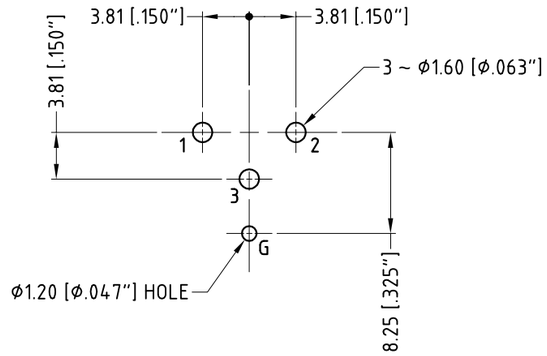

PCB - LAYOUT

COMPONENT SIDE

TOLERANCE: ±0.05mm [.002"]

REV.	CHANGE DETAILS	BY	DATE	CHG/No
1	UPDATE FROM CUSTOMER DRAWING ADD PAGE 1 OF 2 FOR ASSEMBLY DRAWING	L.V	12-06-03	8185
0	FIRST ISSUE	L.V	23-02-01	----

UNLESS OTHERWISE SPECIFIED TOLERANCE TO BE

LINEAR	ANGULAR
X ± 0.5	X° ± 1°
X,X ± 0.1	X°X' ± 30'
X,XX± 0.05	X°X'X"± 15'

BREAK ALL SHARP EDGES AND REMOVE ALL BURRS

DO NOT SCALE

DIMENSIONS IN MILIMETRES

THIS DOCUMENT IS THE PROPERTY OF AMPHENOL AUSTRALIA PTY. LTD.. NO PART THEREOF MAY BE REPRODUCED AND USED WITHOUT THE PRIOR WRITTEN CONSENT OF THE OWNER

CAD FILE: 55010034000221	DRN: L.V	DATE: 23-02-01	
MATL: REFER TO COMPONENT	CKD: M.N.H	DATE: 20-06-03	
FINISH: REFER TO COMPONENT	APP'D: P.M	DATE: 30-06-03	
THIRD ANGLE PROJECTION	SCALE: 2:1 UOS	PART No: 55010034-000	SIZE: A3

TITLE:

AC3MAV A-TYPE VERTICAL MALE CUSTOMER DRAWING

Amphenol

Amphenol Australia Pty.Ltd, 2 Fiveways Blvd, Keysborough, Vic3173

DRAWING NO. 55010034-000-2

SHEET 2 OF 2