THIS DRAWING IS UNPUBLISHED. RELEASED FOR PUBLICATION 20
© COPYRIGHT 20 BY - ALL RIGHTS RESERVED.

REVISIONS					
P	LTR	DESCRIPTION	DATE	DWN	APVD
	A3	REVISED PER ECR-16-011494	30MAY2017	NK	CX

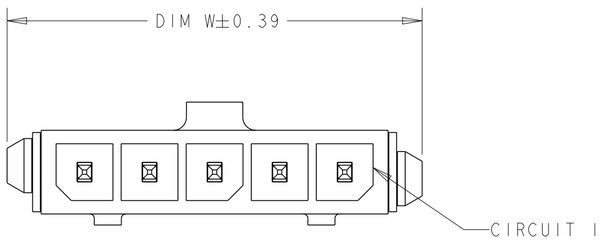

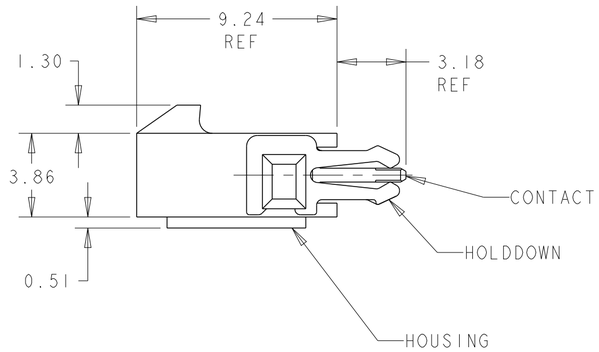

1. MATERIAL: CONTACTS - BRASS
HOUSING - UL 94V-O RATED HIGH TEMP NYLON, COLOR BLACK.
HOLDDOWNS: - PHOSPHOR BRONZE.

2. PLATING: CONTACTS - 0.76µm MINIMUM GOLD ON MATING END, 2.54µm MINIMUM TIN LEAD ON SOLDER TAILS, BOTH OVER 1.27µm MINIMUM NICKEL.
HOLDDOWNS: 2.54µm MINIMUM MATTE TIN OVER 1.27µm MINIMUM NICKEL.

4. RECOMMENDED PC BOARD THICKNESS OF 1.57.

5. PLATING: CONTACTS - 0.76µm MINIMUM GOLD ON MATING END, 2.54µm MINIMUM MATTE TIN ON SOLDER TAILS, BOTH OVER 1.27µm MINIMUM NICKEL.
HOLDDOWNS: 2.54µm MINIMUM MATTE TIN OVER 1.27µm MINIMUM NICKEL.

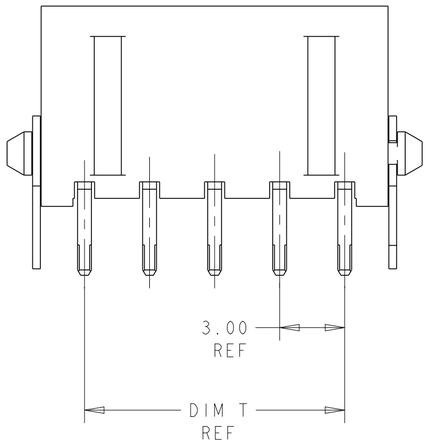

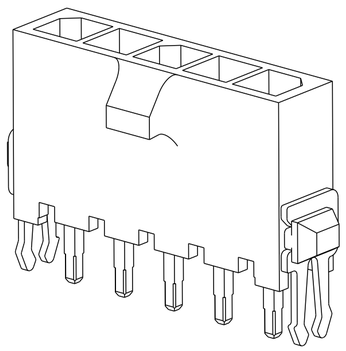

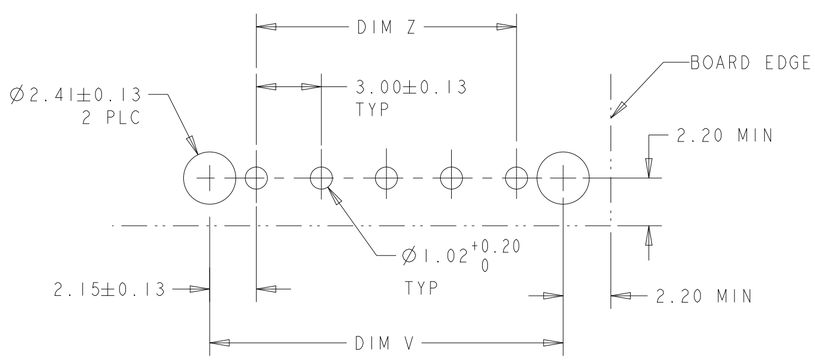

PCB LAYOUT COMPONENT SIDE 4

	FINISH	DIM Z	DIM V	DIM T	DIM W	NO. OF POSN	PART NUMBER
	5	33.00	37.43	33.00	40.14	12	3-1445094-2
	5	30.00	34.43	30.00	37.14	11	3-1445094-1
	5	27.00	31.43	27.00	34.14	10	3-1445094-0
	5	24.00	28.43	24.00	31.14	9	2-1445094-9
	5	21.00	25.43	21.00	28.14	8	2-1445094-8
	5	18.00	22.43	18.00	25.14	7	2-1445094-7
	5	15.00	19.43	15.00	22.14	6	2-1445094-6
	5	12.00	16.43	12.00	19.14	5	2-1445094-5
	5	9.00	13.43	9.00	16.14	4	2-1445094-4
	5	6.00	10.43	6.00	13.14	3	2-1445094-3
	5	3.00	7.43	3.00	10.14	2	2-1445094-2
SUPERCEDED BY 3-1445094-2	2	33.00	37.43	33.00	40.14	12	~~1-1445094-2~~
SUPERCEDED BY 3-1445094-1	2	30.00	34.43	30.00	37.14	11	~~1-1445094-1~~
SUPERCEDED BY 3-1445094-0	2	27.00	31.43	27.00	34.14	10	~~1-1445094-0~~
SUPERCEDED BY 2-1445094-9	2	24.00	28.43	24.00	31.14	9	~~1445094-9~~
SUPERCEDED BY 2-1445094-8	2	21.00	25.43	21.00	28.14	8	~~1445094-8~~
SUPERCEDED BY 2-1445094-7	2	18.00	22.43	18.00	25.14	7	~~1445094-7~~
SUPERCEDED BY 2-1445094-6	2	15.00	19.43	15.00	22.14	6	~~1445094-6~~
SUPERCEDED BY 2-1445094-5	2	12.00	16.43	12.00	19.14	5	~~1445094-5~~
SUPERCEDED BY 2-1445094-4	2	9.00	13.43	9.00	16.14	4	~~1445094-4~~
SUPERCEDED BY 2-1445094-3	2	6.00	10.43	6.00	13.14	3	~~1445094-3~~
SUPERCEDED BY 2-1445094-2	2	3.00	7.43	3.00	10.14	2	~~1445094-2~~

THIS DRAWING IS A CONTROLLED DOCUMENT.

DIMENSIONS: mm

TOLERANCES UNLESS OTHERWISE SPECIFIED:
0 PLC ±
1 PLC ±
2 PLC ±0.20
3 PLC ±
4 PLC ±
ANGLES ±

MATERIAL 1

FINISH SEE TABLE

DWN J ROOT 10OCT2000
CHK K WHITAKER 17-APR-2001
APVD C JONES 17-APR-2001
PRODUCT SPEC -
APPLICATION SPEC -
WEIGHT -

TE Connectivity

NAME VERTICAL THRU HOLE HEADER ASSY, 0.76 MIC GOLD CONTACTS, W/THRU HOLE HOLDDOWNS, SGL ROW. MICRO MATE-N-LOK™

SIZE A2 | CAGE CODE 00779 | DRAWING NO C-1445094 | RESTRICTED TO -

CUSTOMER DRAWING | SCALE 5:1 | SHEET 1 OF 1 | REV A3