Alle Rechte vorbehalten/ *All rights reserved*

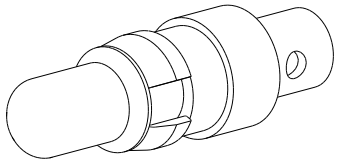

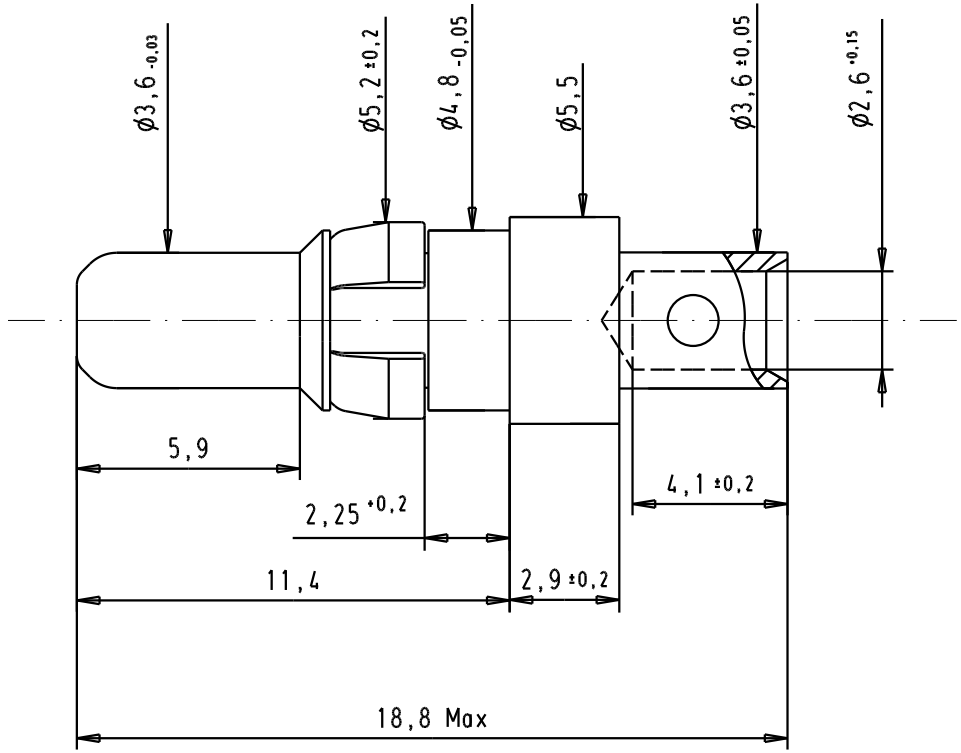

Crimping tool : 09 99 000 0509
Cable adjustments
AWG 12 wire : SEL.NO. 5
AWG 14 wire : SEL.NO. 4

Positioner : 09 99 000 0522

Part number	Plating		Mod.	Dat.	Name
09692827821	Mating area	0.2 µm Au			
	Termination area	0,2 µm Au			
09692825821	Mating area	0.8 µm Au			
	Termination area	0,2 µm Au	33412	10/01/06	JMDR

	Dat.	Name
Detail.	10/01/06	JMDR
Insp.		
Stand.		

All Dim. in mm
Orig. Size DIN A 4

HARTING ELEKTRONIK
F-95972 Paris

Male power contact,
20 Amp straight cable
crimp termination
for AWG 12-14 wires

TB 09 69 282 x821

Sub.

Maßstab/ *Scale* 5/1

Blatt/ *Page* 1/1