THIS DRAWING IS UNPUBLISHED. RELEASED FOR PUBLICATION 20
© COPYRIGHT 20 BY - ALL RIGHTS RESERVED.

REVISIONS

P	LTR	DESCRIPTION	DATE	DWN	APVD
	L	REDRAWN/REVISED PER ECO-17-001755	21NOV2017	GR	JO

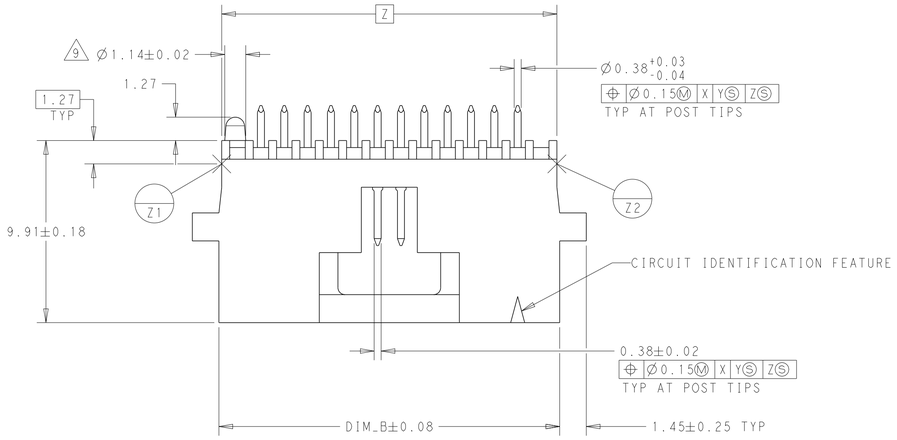

1. HOUSING:FLAME RETARDANT LCP, COLOR-BLACK
2. CONTACTS:COPPER ALLOY
3. CONTACT AREA PLATED WITH 0.76µm MIN GOLD;SOLDER TAILS PLATED WITH 3.81µm MIN TIN-LEAD,ALL OVER 1.27µm MIN NICKEL
4. NOTE DELETED.
5. DIMENSION APPLIES AT BASE OF SHROUD.
6. THE NOTED DIMENSIONS APPLY AT THE INTERSECTION OF THE POST AND HOUSING.
7. NOTE DELETED.
8. SAME AS 104864-1 EXCEPT PACKAGED ON G-PAX REELS.
9. DIMENSION FOR DIAMETER OF PEG APPLIES AT INTERSECTION OF THE TOP OF RIBS AND BASE OF PEG.
10. CONTACT AREA PLATED WITH 0.76µm MIN GOLD; SOLDER TAILS PLATED WITH 3.81µm MIN TIN,ALL OVER 1.27µm MIN NICKEL.
11. FINISH: 0.03µm MIN GOLD ON GOLD PLATED AREA, 3.81µm MATTE TIN LEAD ON TIN PLATE AREA. UNDER PLATING SHOULD BE 1.27µm NICKEL ON ENTIRE CONTACT,GOLD AND TIN PLATING MAY NOT OVERLAP.
12. FINISH: 0.03µm MIN GOLD ON GOLD PLATED AREA, 3.81µm MATTE TIN ON TIN PLATE AREA. UNDER PLATING SHOULD BE 1.27µm NICKEL ON ENTIRE CONTACT,GOLD AND TIN PLATING MAY NOT OVERLAP.

13 NOTE DELETED.
14 NOTE DELETED.
15 NOTE DELETED.

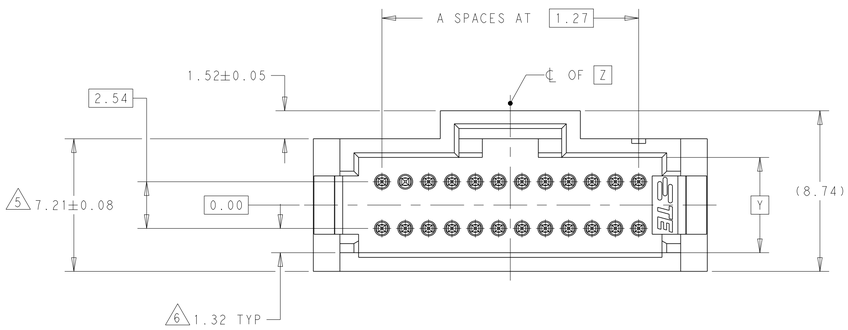

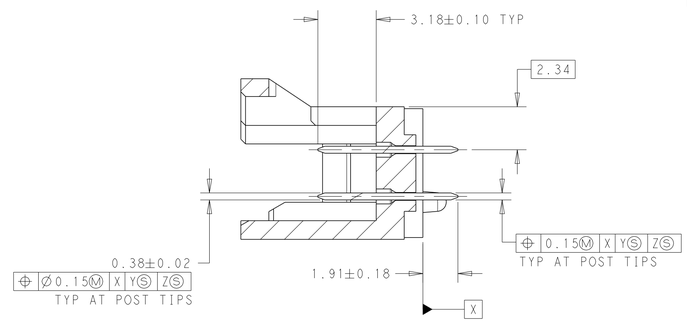

SECTION A-A

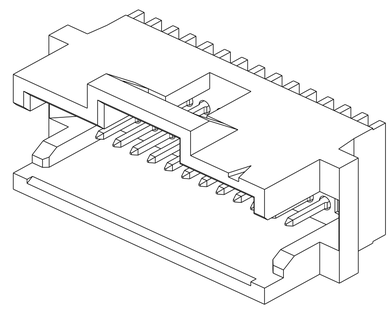

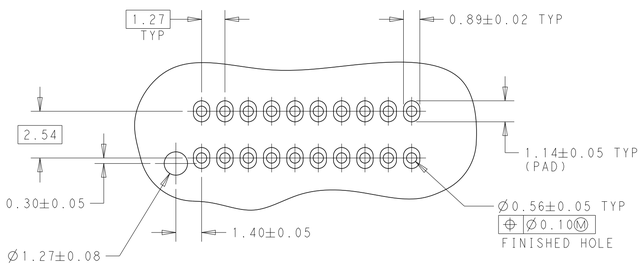

RECOMMENDED HOLE PATTERN

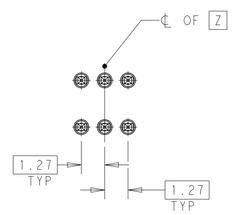

BASIC DIMENSION FOR EVEN NUMBER OF SPACES (SEE TABLE)

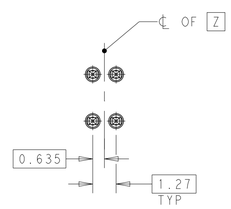

BASIC DIMENSION FOR ODD NUMBER OF SPACES (SEE TABLE)

12	19.81	12	26	7-104864-5
	23.25	14	30	7-104864-4
	49.02	35	72	7-104864-3
	-	-	-	7-104864-2
	41.40	29	60	7-104864-1
10	19.81	12	26	5-104864-5
	23.25	14	30	5-104864-4
	49.02	35	72	5-104864-3
	-	-	-	5-104864-2
	41.40	29	60	8 5-104864-1
FINISH	DIM_B	DIM_A	NO OF POSN	PART NUMBER

11	19.81	12	26	2-104864-5
	23.25	14	30	2-104864-4
	49.02	35	72	2-104864-3
	-	-	-	2-104864-2
	41.40	29	60	2-104864-1
3	19.81	12	26	104864-5
	23.25	14	30	104864-4
	49.02	35	72	104864-3
	-	-	-	104864-2
	41.40	29	60	8 104864-1
FINISH	DIM_B	DIM_A	NO OF POSN	PART NUMBER

THIS DRAWING IS A CONTROLLED DOCUMENT.

DIMENSIONS: mm

TOLERANCES UNLESS OTHERWISE SPECIFIED:
0 PLC ±-
1 PLC ±0.3
2 PLC ±0.13
3 PLC ±-
4 PLC ±-
ANGLES ±0.5°

MATERIAL 1 2

FINISH - SEE TABLE

DWN G.RAMESH 21NOV2017
CHK J.OLSON 21NOV2017
APVD J.OLSON 21NOV2017

TE Connectivity

NAME HEADER ASSEMBLY,VERTICAL,SHROUDED,DUAL ROW W/SIDE AND END LATCHED,AMPMODU System 50

PRODUCT SPEC 108-1093
APPLICATION SPEC 114-25031
WEIGHT -

SIZE	CAGE CODE	DRAWING NO	RESTRICTED TO
A1	00779	C-104864	-

CUSTOMER DRAWING | SCALE 6:1 | SHEET 1 OF 1 | REV L

4805 (3/13)