| BS,C ,202311,007 | E |
|---|---|

| GEN. ST. | 01 | 02 | 03 | 04 | 05 | 06 | 07 | 08 | 0D | 50 | 60 | 70 | 80 | 90 |
|---|---|---|---|---|---|---|---|---|---|---|---|---|---|---|
| INT. ST. | 10 11 | 12 13 | 14 18 | 20 31 | 32 33 | 34 38 | 39 40 | 42 43 | 44 45 | 46 48 | 56 70 | 72 73 | 75 76 | 81 82 | 83 84 | 88 |

| REV. | DATE | DESCRIPTION | BY | C'K'D' |
|---|---|---|---|---|
| B | 2002-10-16 | B20174 | MF | |
| C | 2003-07-23 | B20174 | BKP | |
| D | 2005-11-22 | 105-0241 | ALEX B | BKP |
| E | 2006-08-08 | 106-0144 | ALEX B | BKP |

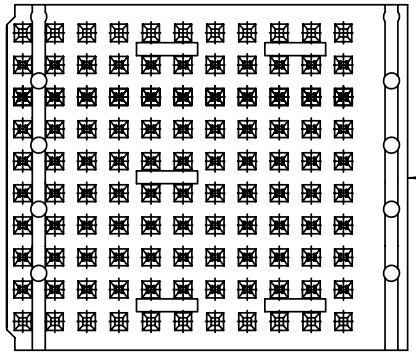


NOTES:
1. MEASURED AT THE BOTTOM
2. MATERIAL: GLASSREINFORCED POLYESTER UL94 - V0
3. THE"LF"PRODUCT MEETS EUROPEAN UNION DIRECTIVES AND OTHER COUNTRY REGULATIONS AS DESCRIBED IN GS-22-008.
4. PARTS WITH AND WITHOUT SUFFIX LF TO THE PRODUCT PART NUMBER ARE IDENTICAL IN FORM,FIT AND FUNCTION.LF SUFFIX IS ADDED TO THE PART NUMBER OF THIS PRODUCT TO HAVE UNIFORM IDENTIFICATION OF ALL RoHS COMPATIBLE PRODUCTS.

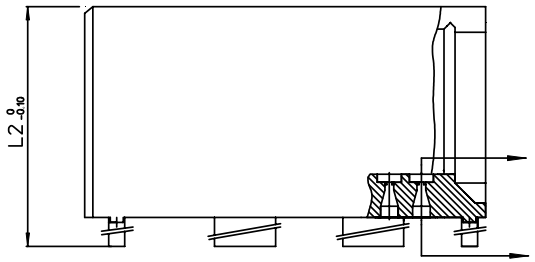


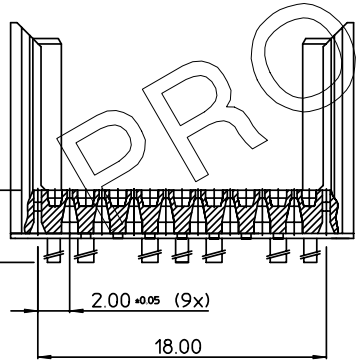


HM2H89P1--LF

RoHS COMPATIBLE (DIGIT 11 & 12)

STANDOFF HEIGHT INDICATOR

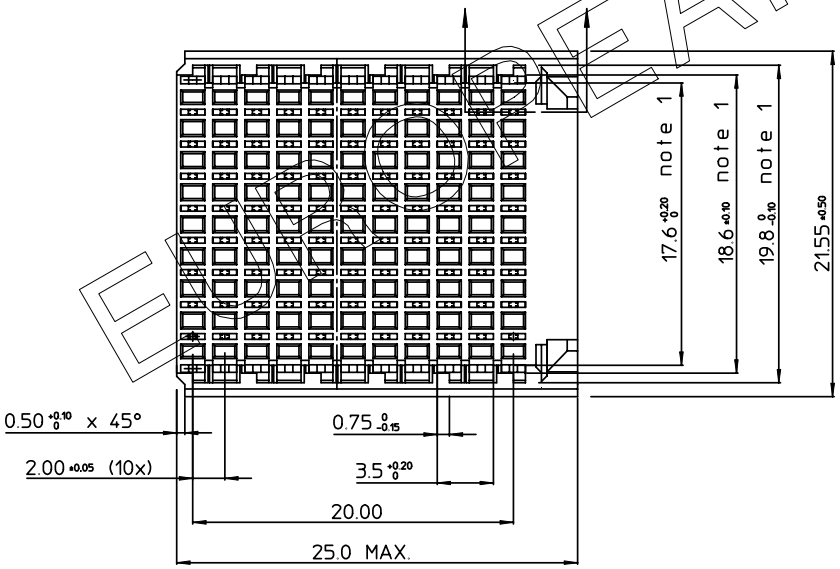


| PART NUMBER | L1 | L2 | |
|---|---|---|---|
| HM2H89P1LF | 3.0 | 13.45 | AVAILABLE |
| HM2H89P109LF | 3.9 | 14.35 | AVAILABLE |
| HM2H89P111LF | 4.1 | 14.55 | AVAILABLE |
| HM2H89P113LF | 4.3 | 14.75 | AVAILABLE |
| HM2H89P115LF | 4.5 | 14.95 | AVAILABLE |
| HM2H89P117LF | 4.7 | 15.15 | AVAILABLE |
| HM2H89P119LF | 4.9 | 15.35 | AVAILABLE |


EXAMPLE AN PROJECTION


1DEC ±0,2
2DEC ±0,1
ANGLES ±1°

WE RESERVE THE RIGHT TO CHANGE DIMENSIONS OR REQUIREMENTS WITHOUT PRIOR NOTICE.

ALL DIMENSIONS IN MM

| APPR. | DATE | SIGN. |
|---|---|---|
| DRAFT | 1997-05-13 | M.Fret |
| CHECKED | | |
| PROD. MGR. | | |
| PR.ENG.MGR. | | |
| PR.MGT.MGR. | | |

REFERENCES

MPACS 8+2R SHROUD TYPE F

CAT. No. HM2H89P1--LF

FCI www.fciconnect.com

SCALE 3/1

BS,C ,202311,007 — DRAWING No. — CUSTOMER DRAWING — E — REVISION


THIS IS OUR EXCLUSIVE PROPERTY. IT IS NOT TO BE COPIED, REPRINTED OR DISCLOSED TO A THIRD PARTY, NOR USED FOR MANUFACTURING WITHOUT OUR WRITTEN CONSENT, AND HAS TO BE RETURNED TO US IN CASE OF NO USAGE

DIT IS ONZE EIGENDOM EN MAG NOCH NAGEMAAKT, HERDRUKT, OVERGEMAAKT AAN DERDEN, NOCH VOOR FABRIKATIE GEBRUIKT WORDEN, ZONDER ONZE SCHRIFTELIJKE TOELATING. BIJ NIET GEBRUIK IS TERUGZENDING VERPLICHT.


PDM: Rev:E STATUS: Released Printed: Dec 03, 2007