BS,C ,202311,007	E

GEN. ST.	01	02	03	04	05	06	07	08	0D	50	60	70	80	90
INT. ST.	10 11	12 13	14 18	20 31	32 33	34 38	39 40	42 43	44 45	46 48	56 70	72 73	75 76	81 82	83 84	88

REV.	DATE	DESCRIPTION	BY	C'K'D'
B	2002-10-16	B20174	MF	
C	2003-07-23	B20174	BKP	
D	2005-11-22	105-0241	ALEX B	BKP
E	2006-08-08	106-0144	ALEX B	BKP

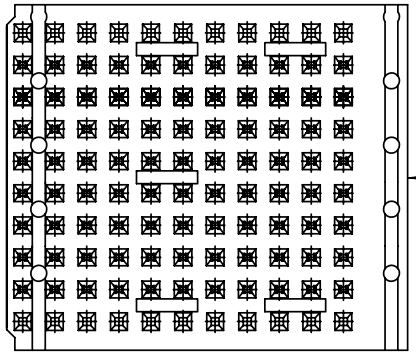

NOTES:
1. MEASURED AT THE BOTTOM
2. MATERIAL: GLASSREINFORCED POLYESTER UL94 - V0
3. THE"LF"PRODUCT MEETS EUROPEAN UNION DIRECTIVES AND OTHER COUNTRY REGULATIONS AS DESCRIBED IN GS-22-008.
4. PARTS WITH AND WITHOUT SUFFIX LF TO THE PRODUCT PART NUMBER ARE IDENTICAL IN FORM,FIT AND FUNCTION.LF SUFFIX IS ADDED TO THE PART NUMBER OF THIS PRODUCT TO HAVE UNIFORM IDENTIFICATION OF ALL RoHS COMPATIBLE PRODUCTS.

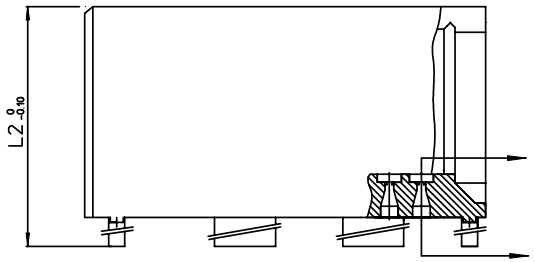

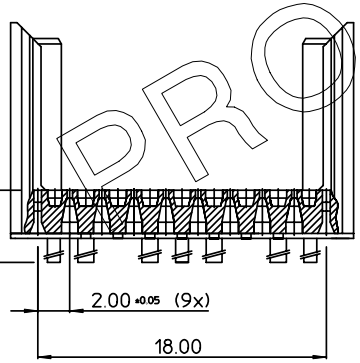

HM2H89P1--LF

RoHS COMPATIBLE (DIGIT 11 & 12)

STANDOFF HEIGHT INDICATOR

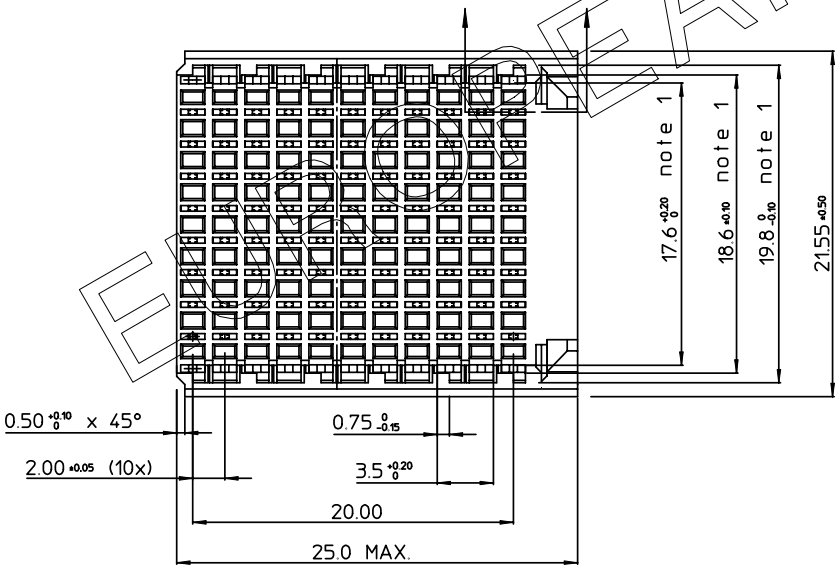

PART NUMBER	L1	L2	
HM2H89P1LF	3.0	13.45	AVAILABLE
HM2H89P109LF	3.9	14.35	AVAILABLE
HM2H89P111LF	4.1	14.55	AVAILABLE
HM2H89P113LF	4.3	14.75	AVAILABLE
HM2H89P115LF	4.5	14.95	AVAILABLE
HM2H89P117LF	4.7	15.15	AVAILABLE
HM2H89P119LF	4.9	15.35	AVAILABLE

EXAMPLE AN PROJECTION

1DEC ±0,2
2DEC ±0,1
ANGLES ±1°

WE RESERVE THE RIGHT TO CHANGE DIMENSIONS OR REQUIREMENTS WITHOUT PRIOR NOTICE.

ALL DIMENSIONS IN MM

APPR.	DATE	SIGN.
DRAFT	1997-05-13	M.Fret
CHECKED		
PROD. MGR.		
PR.ENG.MGR.		
PR.MGT.MGR.		

REFERENCES

MPACS 8+2R SHROUD TYPE F

CAT. No. HM2H89P1--LF

FCI www.fciconnect.com

SCALE 3/1

BS,C ,202311,007 — DRAWING No. — CUSTOMER DRAWING — E — REVISION

THIS IS OUR EXCLUSIVE PROPERTY. IT IS NOT TO BE COPIED, REPRINTED OR DISCLOSED TO A THIRD PARTY, NOR USED FOR MANUFACTURING WITHOUT OUR WRITTEN CONSENT, AND HAS TO BE RETURNED TO US IN CASE OF NO USAGE

DIT IS ONZE EIGENDOM EN MAG NOCH NAGEMAAKT, HERDRUKT, OVERGEMAAKT AAN DERDEN, NOCH VOOR FABRIKATIE GEBRUIKT WORDEN, ZONDER ONZE SCHRIFTELIJKE TOELATING. BIJ NIET GEBRUIK IS TERUGZENDING VERPLICHT.

PDM: Rev:E STATUS: Released Printed: Dec 03, 2007