THIS DRAWING IS UNPUBLISHED. RELEASED FOR PUBLICATION – , – .
© COPYRIGHT – By – ALL RIGHTS RESERVED.

LOC	DIST
H	—

REVISIONS

P	LTR	DESCRIPTION	DATE	DWN	APVD
	A	INITIAL RELEASE	29APR2014	GSK	BvH

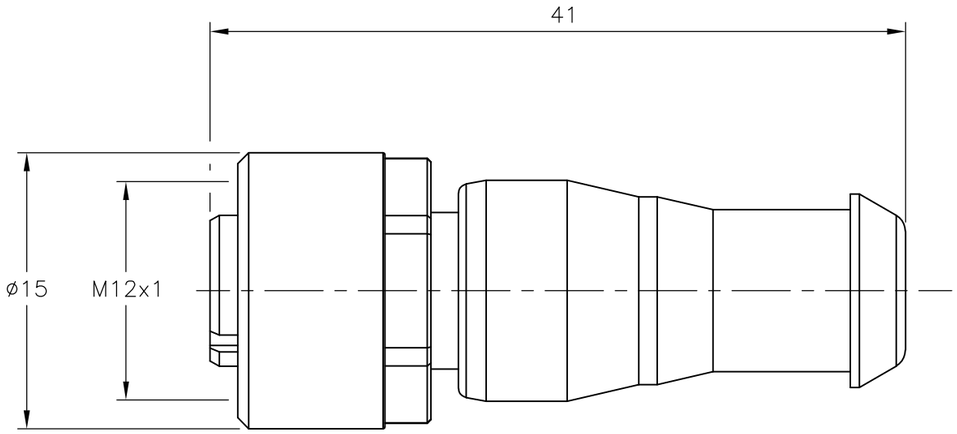

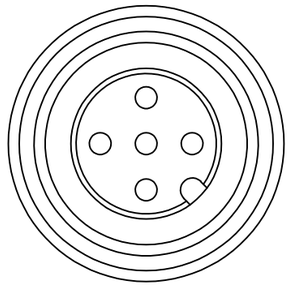

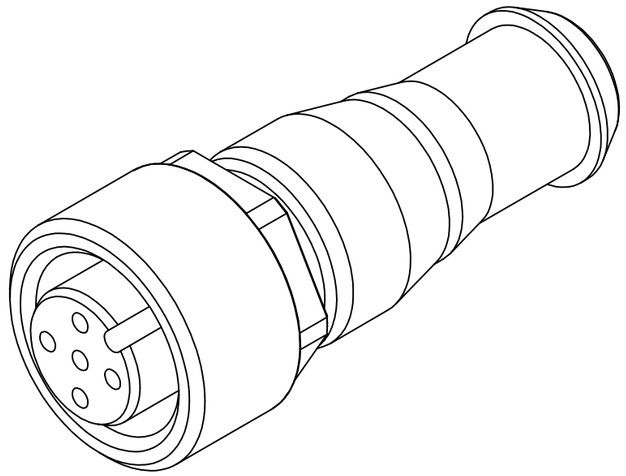

Contact Layout
Female

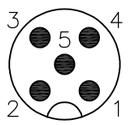

Circuit diagram

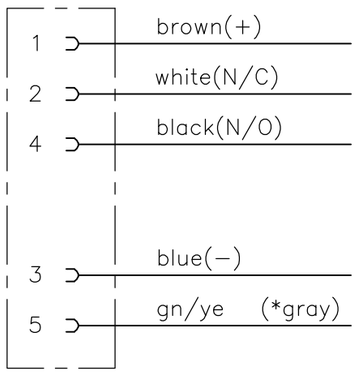

(*for cable type 126 and 732)

M12 X 1.0 STRAIGHT SOCKET 5POS A	2273195–1
DESCRIPTION	TE PN

THIS DRAWING IS A CONTROLLED DOCUMENT.

DIMENSIONS: mm

TOLERANCES UNLESS OTHERWISE SPECIFIED:
0 PLC ± –
1 PLC ± –
2 PLC ± –
3 PLC ± –
4 PLC ± –
ANGLES ± –

MATERIAL –

FINISH –

DWN 29APR2014 SATHISH KUMAR .G
CHK 29APR2014 B.VELDHOVEN
APVD 29APR2014 A.VAN ZANDVOORT
PRODUCT SPEC —
APPLICATION SPEC —
WEIGHT —

TE Connectivity

NAME M12 STRAIGHT SOCKET 5POS A
–

SIZE	CAGE CODE	DRAWING NO	RESTRICTED TO
A3	00779	C–2273195	—

CUSTOMER DRAWING

SCALE NTS | SHEET 1 OF 1 | REV A