Pomona®

Model 5243 & 5520 Kit Do-It-Yourself SMD Grabber Test Clips

Kit containing 10 pieces of 5243, one of each color.

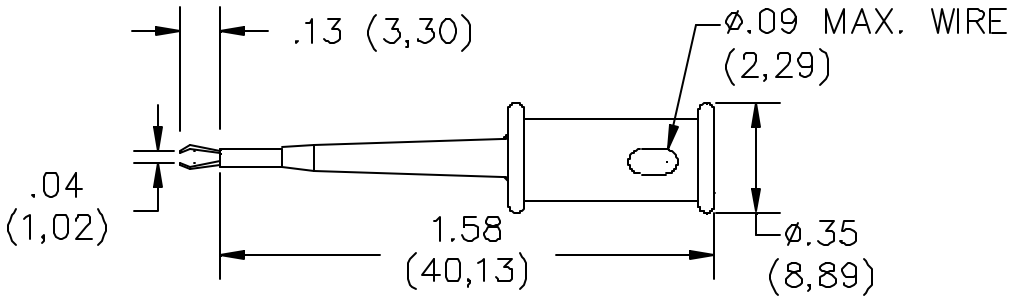

MATERIALS:
Contact – Stainless steel, Type 301, ½ Hard
Spring – Stainless steel, Type 302.
Cap – Glass Filled Nylon.
Marking: "Model 5243"
Barrel – Glass filled nylon. Color: Matches color of cap.
Marking: "POMONA GRABBER®"
Finish: Contact – Gold plated per MIL-G-45204, Type II, 30 to 50 microinches.

RATINGS:
Operating Temperature: +102° C. (+216° F) Max.
Operating Voltage: 30VAC / 60VDC Max.
Current: 0.5 Amperes

ORDERING INFORMATION: Model 5243 & 5520 Kit

Standard Colors: Available in 10 colors: -0 Black, -1 Brown, -2 Red, -3 Orange, -4 Yellow, -5 Green, -6 Blue, -7 Violet, -8 Gray, -9 White
Ordering Example: 5243-2 Color is Red
Ordering 5520 "Kit" – contains one color each of the 5243-*.

SIMPLIFIED ASSEMBLY PROCEDURE
1. Pull off thumb cap to expose contact connection.
2. Thread wire through thumb cap and strip 3.18 (1/8).
3. Insert stripped end through hole on contact and solder.
4. Slide thumb cap back onto contact.

All dimensions are in inches. Tolerances (except noted): .xx = ±.02" (,51 mm), .xxx = ± .005" (,127 mm).
All specifications are to the latest revisions. Specifications are subject to change without notice.
Registered trademarks are the property of their respective companies.

Made in USA

Sales: 800-490-2361 Fax: 888-403-3360
Technical Assistance: 800-241-2060

Pomona*ACCESS* **90319** (800) 444-6785 or (425) 446-6010
More drawings available at www.pomonaelectronics.com