THIS COPY IS PROVIDED ON A RESTRICTED BASIS AND IS NOT TO BE USED IN ANY WAY DETRIMENTAL TO THE INTERESTS OF PANDUIT CORP.

PART #	WIRE	WIRE STRIP LENGTH	STUD HOLE	A +/- .1	B +/- .08	D +/- .01	E +/- .01	G +/- .1	C +/- .1	T +/- .03	W +/- .03
S8-10R	8	7/16"	#10	1.1	0.40	0.27	0.18	0.25	0.56	0.08	0.41
S8-14R	8	7/16"	1/4	1.2	0.40	0.27	0.18	0.25	0.62	0.07	0.48
S8-56R	8	7/16"	5/16	1.3	0.40	0.27	0.18	0.33	0.75	0.05	0.60
S8-38R	8	7/16"	3/8	1.4	0.40	0.27	0.18	0.36	0.84	0.05	0.60
S6-10R	6	1/2"	#10	1.2	0.48	0.31	0.22	0.25	0.56	0.09	0.45
S6-14R	6	1/2"	1/4	1.3	0.48	0.31	0.22	0.25	0.62	0.08	0.48
S6-56R	6	1/2"	5/16	1.4	0.48	0.31	0.22	0.32	0.74	0.07	0.56
S6-38R	6	1/2"	3/8	1.5	0.48	0.31	0.22	0.36	0.84	0.06	0.62
S4-10R	4	1/2"	#10	1.2	0.48	0.38	0.28	0.25	0.56	0.09	0.55
S4-14R	4	1/2"	1/4	1.3	0.48	0.38	0.28	0.25	0.62	0.09	0.55
S4-56R	4	1/2"	5/16	1.4	0.48	0.38	0.28	0.32	0.74	0.09	0.55
S4-38R	4	1/2"	3/8	1.5	0.48	0.38	0.28	0.36	0.84	0.07	0.62
S2-10R	2 & 1	5/8"	#10	1.6	0.59	0.47	0.36	0.36	0.74	0.11	0.70
S2-14R	2 & 1	5/8"	1/4	1.6	0.59	0.47	0.36	0.36	0.74	0.11	0.70
S2-56R	2 & 1	5/8"	5/16	1.7	0.59	0.47	0.36	0.36	0.80	0.11	0.70
S2-38R	2 & 1	5/8"	3/8	1.7	0.59	0.47	0.36	0.36	0.83	0.11	0.70
S2-12R	2 & 1	5/8"	1/2	1.9	0.59	0.47	0.36	0.47	1.07	0.09	0.79
S1/0-14R	1/0	5/8"	1/4	1.6	0.58	0.52	0.39	0.36	0.74	0.12	0.76
S1/0-56R	1/0	5/8"	5/16	1.7	0.58	0.52	0.39	0.36	0.80	0.12	0.76
S1/0-38R	1/0	5/8"	3/8	1.7	0.58	0.52	0.39	0.37	0.84	0.12	0.76
S1/0-12R	1/0	5/8"	1/2	1.9	0.58	0.52	0.39	0.47	1.07	0.12	0.82
S2/0-14R	2/0	11/16"	1/4	1.9	0.66	0.58	0.45	0.45	0.90	0.13	0.85
S2/0-56R	2/0	11/16"	5/16	1.9	0.66	0.58	0.45	0.45	0.90	0.13	0.85
S2/0-38R	2/0	11/16"	3/8	1.9	0.66	0.58	0.45	0.45	0.90	0.13	0.85
S2/0-76R	2/0	11/16"	7/16	2.1	0.66	0.58	0.45	0.51	1.10	0.13	0.85
S2/0-12R	2/0	11/16"	1/2	2.1	0.66	0.58	0.45	0.51	1.10	0.13	0.85
S3/0-14R	3/0	7/8"	1/4	2.1	0.83	0.64	0.51	0.45	0.90	0.13	0.96
S3/0-56R	3/0	7/8"	5/16	2.1	0.83	0.64	0.51	0.45	0.90	0.13	0.96
S3/0-38R	3/0	7/8"	3/8	2.1	0.83	0.64	0.51	0.45	0.90	0.13	0.96
S3/0-76R	3/0	7/8"	7/16	2.3	0.83	0.64	0.51	0.51	1.10	0.13	0.96
S3/0-12R	3/0	7/8"	1/2	2.3	0.83	0.64	0.51	0.51	1.10	0.13	0.96
S4/0-14R	4/0	15/16"	1/4	2.3	0.91	0.71	0.57	0.57	1.04	0.14	1.06
S4/0-56R	4/0	15/16"	5/16	2.3	0.91	0.71	0.57	0.57	1.04	0.14	1.06
S4/0-38R	4/0	15/16"	3/8	2.3	0.91	0.71	0.57	0.57	1.04	0.14	1.06
S4/0-76R	4/0	15/16"	7/16	2.5	0.91	0.71	0.57	0.57	1.16	0.14	1.06
S4/0-12R	4/0	15/16"	1/2	2.5	0.91	0.71	0.57	0.57	1.16	0.14	1.06
S250-56R	250	1-1/16"	5/16	2.5	1.01	0.77	0.63	0.57	1.04	0.14	1.17
S250-38R	250	1-1/16"	3/8	2.5	1.01	0.77	0.63	0.57	1.04	0.14	1.17
S250-76R	250	1-1/16"	7/16	2.6	1.01	0.77	0.63	0.57	1.16	0.14	1.17
S250-12R	250	1-1/16"	1/2	2.6	1.01	0.77	0.63	0.57	1.16	0.14	1.17

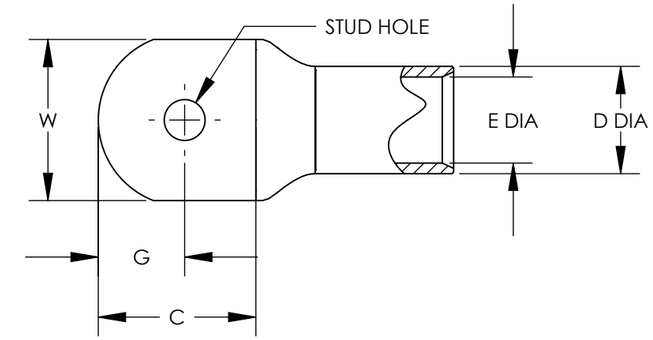

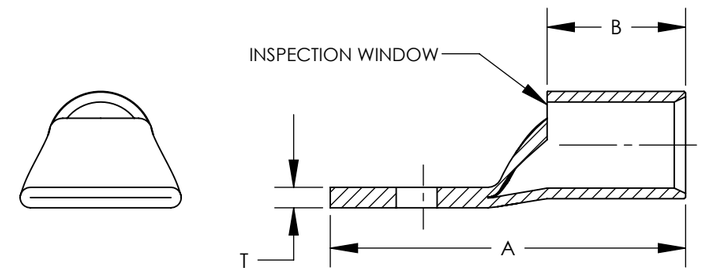

LISTED
587H
E52164

CERTIFIED
LR31212

NOTES:

1. MATERIAL: HIGH CONDUCTIVITY SEAMLESS COPPER TUBE
2. PLATING: ELECTRO-TIN
3. WIRE TYPE: STRANDED COPPER; CLASS B:
   COMPACT, COMPRESSED OR CONCENTRIC,
   CLASS C: CONCENTRIC
4. UL LISTED WIRE CONNECTOR: YES, FOR APPLICATIONS UP TO 35 KV.
   CONSULT CABLE MANUFACTURER FOR
   VOLTAGE STRESS RELIEF INSTRUCTIONS
   WITH APPLICATIONS GREATER THAN 2000 VOLTS.
5. UL TEMPERATURE RATING: 90° C
6. CSA CERTIFIED WIRE CONNECTOR: YES

REV	DATE	BY	CHK	APR	DESCRIPTION	ECN
11	8/14	JHNU	TLCO	RGB	REVISED NOTES CONVERTED DWG TO SOLIDWORKS	N41178BA-C41178

TITLE

TUBULAR TERMINALS

CUSTOMER DRAWING

ITEM REVISION NAME: N41178BA/11

DATASET FILE NAME: N41178BA-C41178/11.SLDDRW

UNLESS OTHERWISE SPECIFIED,
DIMENSIONAL TOLERANCES ARE: IN [mm]
.X ± .XXX ±
.XX ± ANGLES ±

THIRD ANGLE PROJECTION

MATERIAL: SEE NOTES

DRAWING NUMBER: C41178

DRAWN BY: EJD | DATE: | CHK: WJB | SCALE: N/A | SHEET 1 OF 1 | SIZE: B