THIS DRAWING IS UNPUBLISHED. RELEASED FOR PUBLICATION -,- .
© COPYRIGHT - By - ALL RIGHTS RESERVED.

REVISIONS

P	LTR	DESCRIPTION	DATE	DWN	APVD
	G1	REVISED PER ECO-16-004800	08SEP2016	NK	MZ

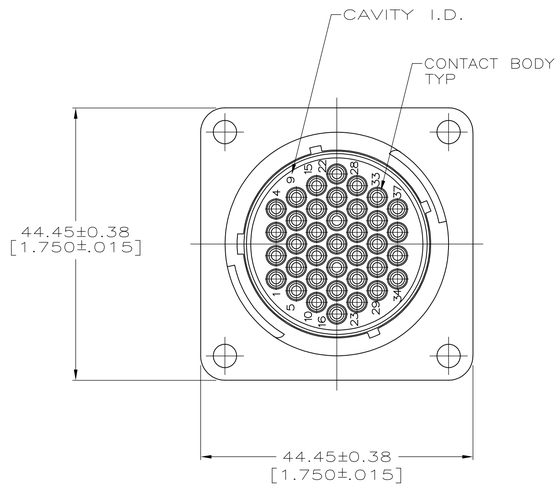

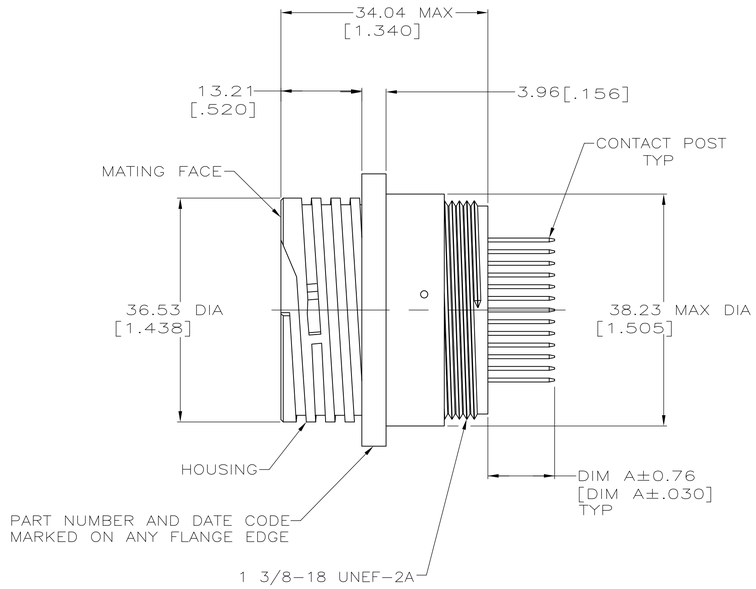

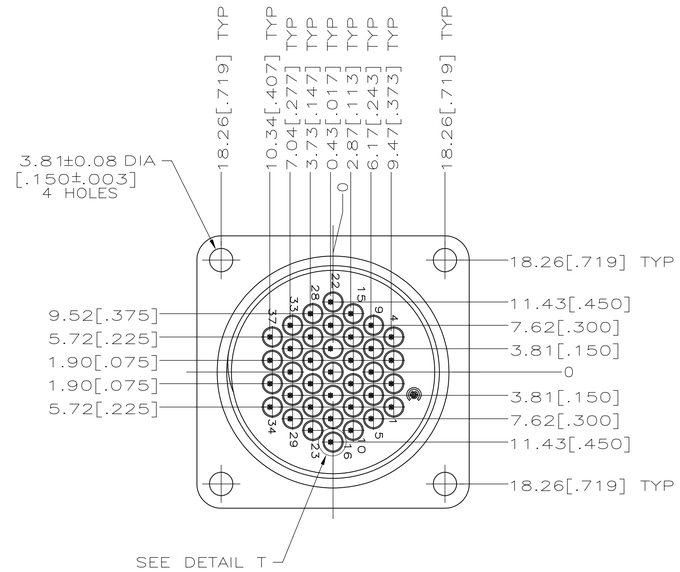

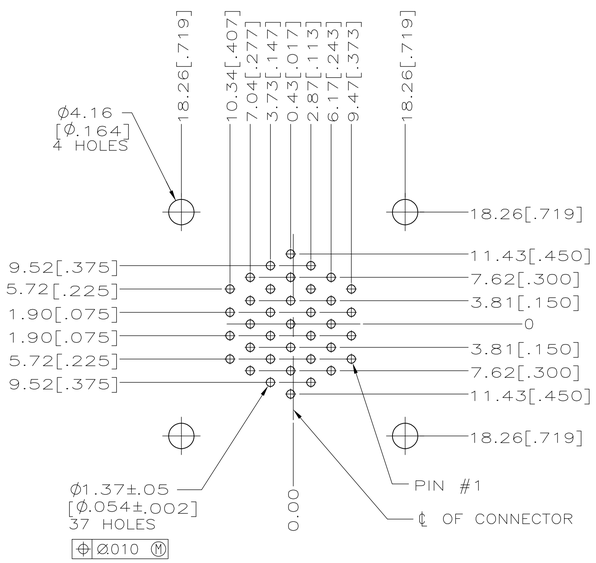

RECOMMENDED P.C. BOARD LAYOUT

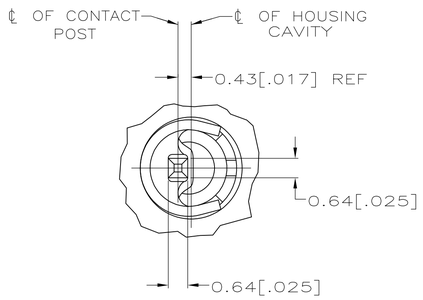

DETAIL T
SCALE 10:1
TYP

1. NYLON, UL 94V-0 RATED, BLACK.
2. STAINLESS STEEL.
3. BRASS.
4. CONTACT BODY: 0.76um [.000030] MIN GOLD FOR A LENGTH OF 5.08 [.200] MIN FROM MATING END. GOLD FLASH ON REMAINDER, BOTH OVER 1.27um [.000050] MIN NICKEL.
   CONTACT POST: 2.54um [.000100] MIN TIN-LEAD OVER 1.27um [.000050] MIN NICKEL.
5. RECOMMENDED PC BOARD HOLE SIZE FOR CONTACT POST = 1.02±0.08[.040±.003] DIA.
6. CONTACT BODY: 0.76um [.000030] MIN GOLD FOR A LENGTH OF 5.08 [.200] MIN FROM MATING END. GOLD FLASH ON REMAINDER, BOTH OVER 1.27um [.000050] MIN NICKEL.
   CONTACT POST: 2.54um [.000100] MIN TIN OVER 1.27um [.000050] MIN NICKEL.

	FINISH	DIM A	PART NUMBER
	6	5.59[.220]	213854-4
	6	10.90[.429]	213854-3
OBSOLETE	4	5.59[.220]	~~213854-2~~
	4	10.90[.429]	213854-1

THIS DRAWING IS A CONTROLLED DOCUMENT.

DIMENSIONS: mm [INCHES]

TOLERANCES UNLESS OTHERWISE SPECIFIED:
0 PLC ± -
1 PLC ± -
2 PLC ± -
3 PLC ± .005
4 PLC ± -
ANGLES ± -

MATERIAL
HOUSING: 1
CONTACT SPRING: 2
CONTACT BODY & POST: 3

FINISH

DWN D.HARDY 01-03-95
CHK R.STONE 01-09-95
APVD T.COULSON 01-10-95
PRODUCT SPEC 108-10024
APPLICATION SPEC —
WEIGHT

TE Connectivity

NAME RECEPTACLE ASSEMBLY, POSTED, STD SEX, SERIES 1, 23-37, CPC

SIZE	CAGE CODE	DRAWING NO	RESTRICTED TO
A1	00779	C-213854	—

CUSTOMER DRAWING | SCALE 2:1 | SHEET 1 OF 1 | REV G1

4805 (1/15)