REV.	DATE	ECR NO.	DESCRIPTION
A	11/25/09	-----	RELEASE TO MFG.

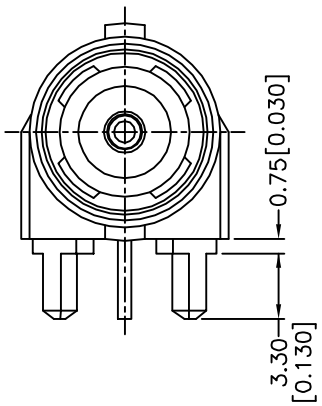

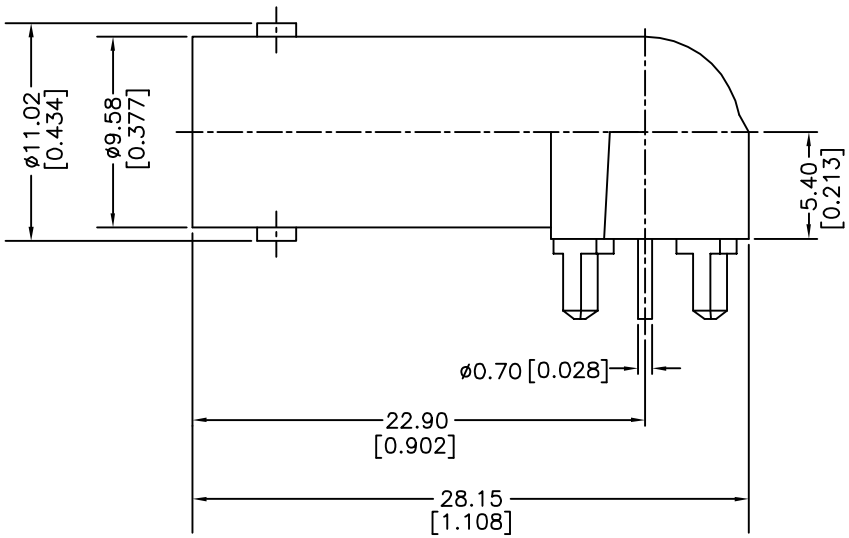

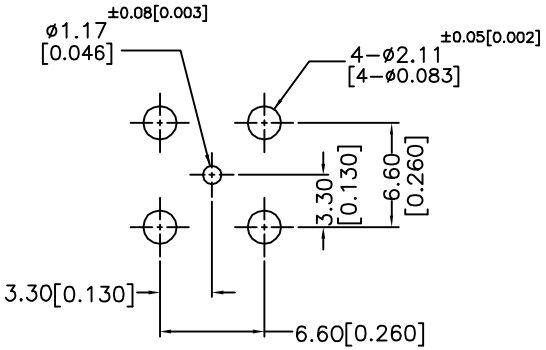

PCB MOUNTING HOLE

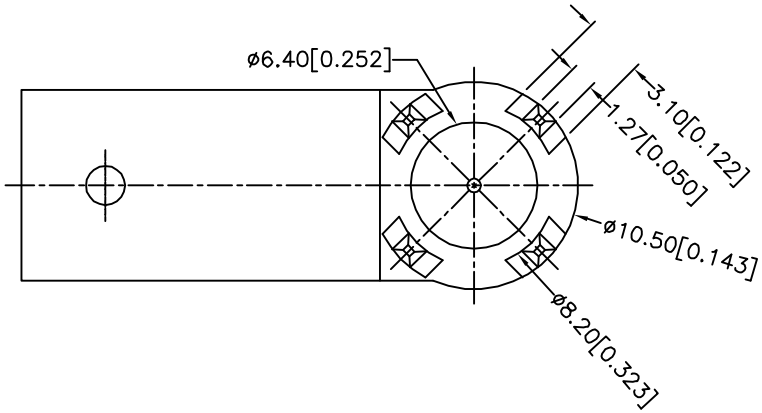

5	INSULATOR C	TEFLON	NATRUAL	1
4	CONTACT PIN	PHOSPHOR BRONZE	GOLD	1
3	INSULATOR B	DERLIN	NATURAL	1
2	INSULATOR A	DERLIN	NATRUAL	1
1	BODY	ZINC	NICKEL	1
	DESCRIPTION	MATERIAL	FINISH	QTY

UNLESS OTHERWISE SPECIFIED DIMENSIONS ARE IN MILLIMETERS. DIMENSIONS IN [ ] ARE IN INCHES AND FOR CUSTOMER REFERANCE ONLY.

UNLESS OTHERWISE SPECIFIED TOLERANCES FOR MILLIMETERS ARE:
0.5 – 8mm ± 0.20mm
8 – 30mm ± 0.40mm
30 – 120mm ± 0.50mm

UNLESS OTHERWISE SPECIFIED TOLERANCES FOR INCHES ARE:
.020 – .315 = ± 0.007"
.315 – 1.180 = ± 0.015"
1.180 – 4.724 = ± 0.020"

DO NOT SCALE DRAWING

APPROVALS		DATE
DRAWN	CLEMENT	11/25/09
CHECKED		
ISSUED		
SHEET	1 OF 1	
CAD FILE	C:/112/112762.DWG	

AMPHENOL CONNEX

PART DESCRIPTION: BNC R/A P.C. JACK,75 OHMS

PART NO. 112762

DWG. NO. 112762.DWG | REV. A | SIZE A | SCALE NA