SIGN	DATE	DESCRIPTION	APPROVER
1	8/07'06	Added VDE standard	梁仁松
2	2008.12.02	With flange screw changed from "-"solt type to "+/-"solt type	Jacke
3	2008.12.02	The temperature changed from -30°c,+105°c to -40°c,+115°c	Jacke
4	2008.12.02	The dimension design changed from 19.1mm to 19.3mm	Jacke

THIS IS CAD DRAWING, DO NOT REVISE MANUALLY!!!

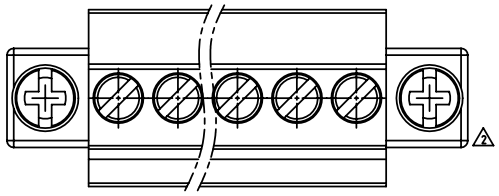

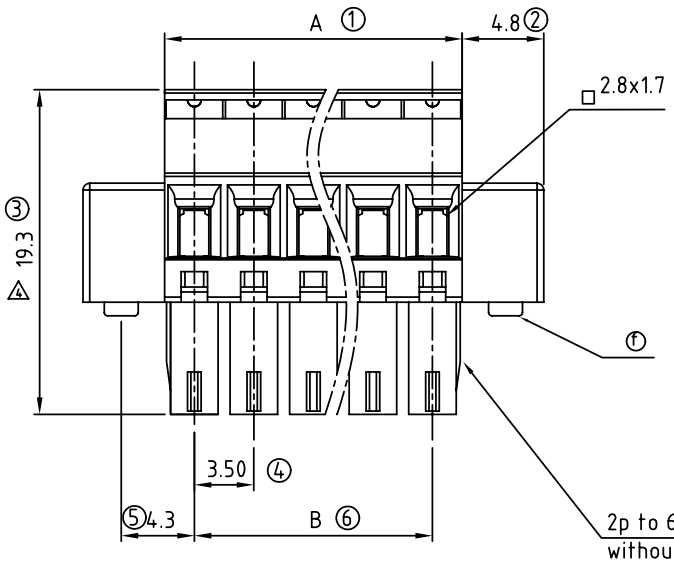

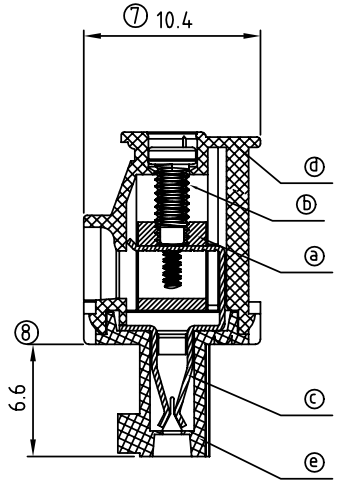

N = Number of contacts

Material

- Item ⓐ Terminal body(metal housing): Brass(CuZn),Nickel plated
- Item ⓑ Terminal screw: Steel Zinc plating "-" slot type
- Item ⓒ Wire guard: PhBz, Tin plated
- Item ⓓ Insulator (housing): Thermoplastic (UL94V-0)
- Item ⓔ Insulator (cover): Thermoplastic (UL94V-0)
- Item ⓕ With flange screw: Steel M2.5 Zinc plating "+/-" slot type

Electrical cULus/VDE

- Voltage rating: 300VAC/300VAC
- Current rating: 8A/10A
- Wire range: 1.5mm
- Solid wire(AWG): 16-28
- Stranded wire(AWG): 16-28
- Torque: 1.7Lb-In./0.2Nm
- Screw: M2
- Wire strip length: 6-7mm
- Withstanding Voltage: 1.6KV/2.5KV
- 3 Operating temperature: -40°C to +115°C
- 1 Safety approval: cULus VDE

TS xx 1 1 x C xxxx G

- xx — No. OF POLES
  - 02: 2 POLES
  - :
  - :
  - 24: 24 POLES
- x — Color
  - 0 Black (RAL9005)
  - 2 Red (RAL3001/D)
  - 3 Orange(RAL2011/P)
  - 4 Yellow(RAL1018/A)
  - 5 Green(RAL6018/T)
  - 6 Blue (RAL5015/A)
  - 8 Grey(RAL7035/D)
- xxxx
  - 0000 Standard @ Logo
  - 000A Standard ANY Logo
  - Any special item by customer request, please contact sales department.
- G — RoHS pb<40 , 000ppm

DIMENSION

A	NX3.5
B	(N-1)X3.5

Poles	Tolerance
2P-8P	±0.10
9P-16P	±0.20
17P-24P	±0.30

ANYTEK

CUSTOMER COPY

ALL RIGHTS RESERVED. REPRODUCTION OR ISSUE TO THIRD PARTIES IN ANY FORM WHATEVER IS NOT PERMITTED WITHOUT WRITTEN AUTHORITY FROM THE PROPRIETOR. PROPERTY OF ANYTEK TECHNOLOGY CO., LTD

TITLE	TS-3.5mm Series With flange (W/latching hooks on the wire entry side)				
PART NO.	TSxx11xCxxxxG			DWG NO.	8TS0203
APPROVED	CHECKED	DESIGNED	DRAWN	CUST NO.	
		Jacke 2008.12.10	Jacke 2008.12.10	UNIT: mm / SCALE: NONE / SHEET: 01/01 / REV.: G	

Tolerance	
X.	±0.50
X.X	±0.30
X.XX	±0.10
X°	±1°