SIGN	DATE	DESCRIPTION	APPROVER
1	07/23'13	change the structure///update the drawing	Da cheng
2			
3			

THIS IS CAD DRAWING, DO NOT REVISE MANUALLY!!!

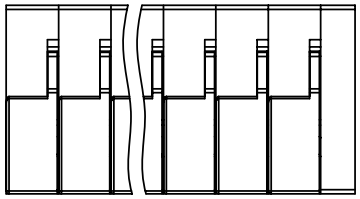

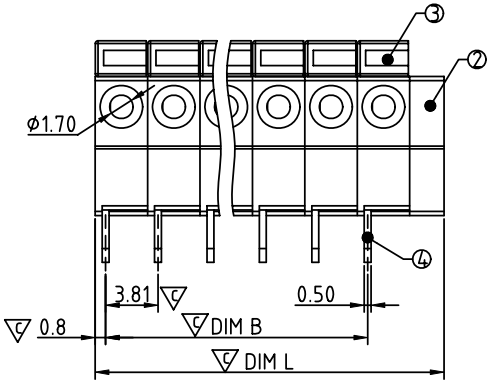

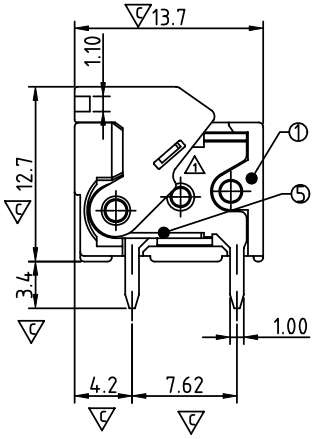

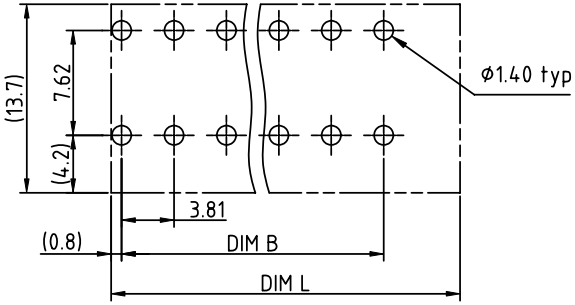

1 P.C.B. LAYOUT
Top view

Material

- Item ① Terminal body — Thermoplastic (UL94V-0)
- Item ② Terminal cover — Thermoplastic (UL94V-0)
- 1 Item ③ Terminal lever — Thermoplastic (UL94V-0) Orange(RAL2011/P)
- Item ④ Solder pin — Brass, Tin plated
- Item ⑤ Spring clamp — Stainless steel

Electrical cULus

- Voltage rating: 300VAC
- Current rating: 6A
- Wire range:
- Solid wire(AWG): 16-26
- Stranded wire(AWG): 16-26
- Withstanding Voltage: 1.6KV
- Operating temperature: -40°C to +115°C
- 1 Soldering temperature: 260°C±5°C/5 Sec
- Safety Approval: c UL us
- 1 Critical dimension: ▽

PART NO.

HA xx 71 x 0 xxxx G

1 RoHs compliant (lead<4%) In copper Alloy

Poles
02 2Poles
03 3Poles
. .
24 24Poles

1 Body Color
0 Black (RAL9005)
2 Red (RAL3001/D)
3 Orange(RAL2011/P)
4 Yellow(RAL1018/A)
5 Green(RAL6018/T)
6 Blue (RAL5015/A)
8 Grey(RAL7004/P)
9 White(RAL1102)
C Multiple colors

0000 Standard @ Logo
000A Standard ANY Logo
Any special item by customer request, please contact sales department.

N = Number of poles
Dim L=Nx3.81+2.5
1 Dim B=(N-1)x3.81

	Dim L	Dim B
2-5p	±0.10	±0.10
6-10p	±0.15	±0.15
11-15p	±0.20	±0.20
16-20p	±0.25	±0.25
21-24p	±0.30	±0.30

ANYTEK

CUSTOMER COPY

ALL RIGHTS RESERVED. REPRODUCTION OR ISSUE TO THIRD PARTIES IN ANY FORM WHATEVER IS NOT PERMITTED WITHOUT WRITTEN AUTHORITY FROM THE PROPRIETOR. PROPERTY OF ANYTEK TECHNOLOGY CO., LTD

TITLE	HA 3.81 Series Horizontal (180D wire inlet)				
PART NO.	HAxx71x0xxxxG			DWG NO.	8HA0801
APPROVED	CHECKED	DESIGNED	DRAWN	CUST NO.	
		Da cheng 2013.07.04	Da cheng 2013.07.04	UNIT: mm	
				SCALE: NONE	
				SHEET: 01/01	REV.: C

Tolerance	
X.	±0.50
X.X	±0.30
X.XX	±0.10
X°	±1°