THIS DRAWING IS UNPUBLISHED. RELEASED FOR PUBLICATION - , - .
© COPYRIGHT - By - ALL RIGHTS RESERVED.

LOC	DIST
AJ	16

REVISIONS

P	LTR	DESCRIPTION	DATE	DWN	APVD
	AZ1	REVISED PER ECO-11-005030	11MAR11	RK	HMR

1. BRASS PER QQ-B-626.
2. BERYLLIUM COPPER PER ASTM-B-196
3. NYLON PER ASTM-D-4066, BLACK
4. POLYMETHYLPENTENE GENERAL PURPOSE, NATURAL
5. .000030 MINIMUM GOLD PER MIL-G-45204.
6. .000050 MINIMUM GOLD PER MIL-G-45204.
7. .000100 MINIMUM GOLD PER MIL-G-45204.
8. RG-174/U, RG-179A/U, RG-187/U, AND 21-598.
9. SHIELDED CABLE #26=NAS-702 CLASS A & C, AND MIL-W-16878 TYPES E & EE, SHIELDED CABLE #24=NAS-702 CLASS A & C, AND MIL-W-16878 TYPES E & EE, SHIELDED CABLE #22=NAS-702 CLASS C, AND MIL-W-16878 TYPE E, AND MIL-C-7078A TYPE I NUMBER 1 DIELECTRIC .068 O.D.

10. SEE IS 408-1770

12. NYLON PER ASTM-D-4066, NATURAL
13. DIELECTRIC MATERIAL: VALOX 325 WHITE

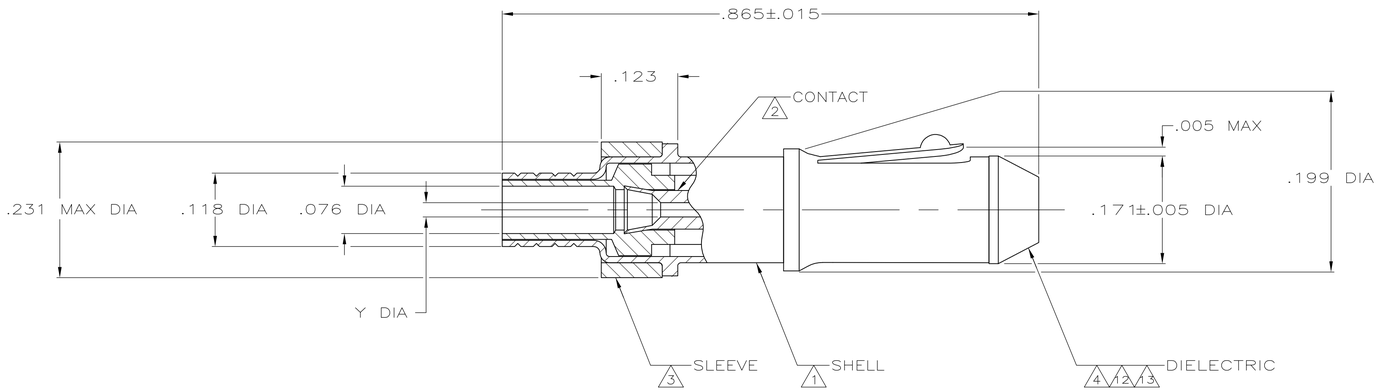

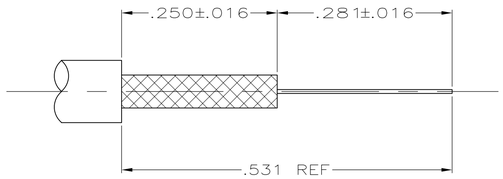

VIEW D
RECOMMENDED STRIP LENGTH

	CONTACT PLATING	SHELL PLATING	WEIGHT	CABLE OR WIRE SIZE	CRIMP TOOL	Y	(3) FERRULE QTY=1	(2) SPRING RETENTION QTY=1	(1) PIN ASSY QTY=1	PART NUMBER
13	5	5	.030 OUNCES	–	–	.032±.003	–	–	–	2-201143-5
13	5	5	.030 OUNCES	–	–	.032±.003	–	–	–	2-201143-4
	7	7	.030 OUNCES	–	–	.032±.003	–	–	–	201143-7
	5	5	.030 OUNCES	–	–	.032±.003	–	–	–	201143-5
	5	5	.030 OUNCES	–	–	.042±.003	–	–	–	201143-3
	5	5	.030 OUNCES	–	–	.023±.003	–	–	–	201143-1

THIS DRAWING IS A CONTROLLED DOCUMENT.

DIMENSIONS: INCHES

TOLERANCES UNLESS OTHERWISE SPECIFIED:
0 PLC ± –
1 PLC ± –
2 PLC ± .008
3 PLC ± –
4 PLC ± –
ANGLES ± –

MATERIAL – 1 2 3 4
FINISH – 5 6 7

DWN J. LIPPERT 08 JAN 90
CHK M. SNEED 23 FEB 90
APVD B. ADAMS 23 FEB 90
PRODUCT SPEC 108-12021
APPLICATION SPEC –
WEIGHT SEE TABLE
CUSTOMER DRAWING

TE Connectivity

NAME PIN, MINIATURE SERIES –

SIZE	CAGE CODE	DRAWING NO	RESTRICTED TO
A1	00779	C-201143	–

SCALE 8:1 SHEET 1 OF 1 REV AZ1

4805 (3/11)