THIS DRAWING IS UNPUBLISHED. RELEASED FOR PUBLICATION 20
© COPYRIGHT 20 - ALL RIGHTS RESERVED.

LOC	DIST
CM	00

REVISIONS

F	LTR	DESCRIPTION	DATE	DWN	APVD
	R	REVISED PER ECO-12-009012	30AUG2012	KH	SM

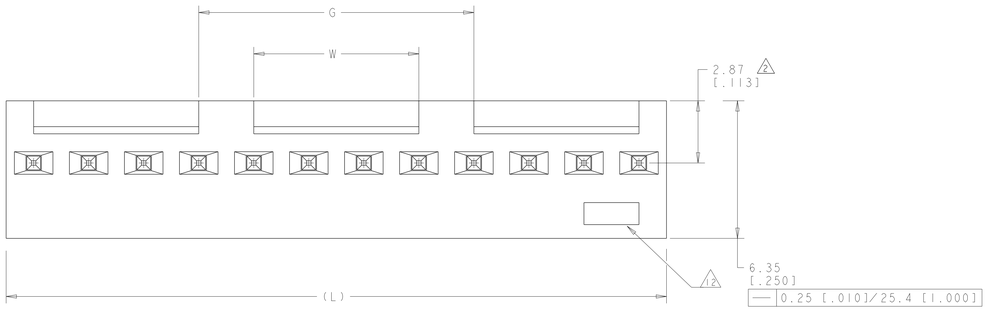

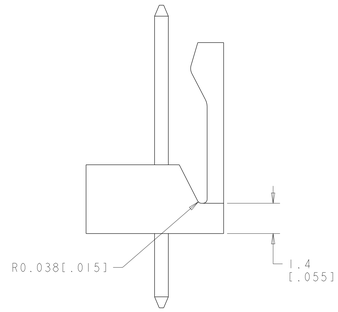

TYPICAL END VIEW
FOR -2 THRU -7

1. POST WITHSTAND 13 NEWTONS (3 LBS) MIN AXIAL FORCE IN DIRECTION SHOWN WITHOUT DISLODGING.
2. MEASURED AT -A-.
3. PARTS COMPLY WITH SOLDERABILITY SPEC 109-11-2.
4. MATERIAL:
   HOUSING: NYLON, 4/6, HIGH TEMP, BLACK,.
   POST - COPPER ALLOY (SEE TABLE FOR PLATING).
5. COORDINATE DIMENSION APPLIES FROM CENTER OF ACTUAL FEATURE.
6. POSTS TO BE MEASURED WHEN STRIP HELD FLAT.
7. DIMENSIONS IN BRACKETS ARE IN INCHES.
8. PLATING: GOLD PLATE AREA, 0.00038 [.000015] GOLD OR 0.00008 [.000003] MIN GOLD FLASH OVER 0.00030 [.000012] PALLADIUM NICKEL, PER TE CONNECTIVITY'S DISCRETION, ALL SIDES, OVER NICKEL UNDERPLATE, 0.00127 [.000050] MIN, ALL SIDES AND ENTIRE LENGTH OF POST.
9. BRIGHT TIN/LEAD (93/7) PLATE AREA,0.00381-0.00889 [.000150-.000350] THICK, ALL FOUR SIDES, 3.56[.140] MIN.
10. TOLERANCES APPLY TO SOLDER SIDE OF BOARD.
11. ONE HOLE MAY BE UNDERSIZED 0.81-0.90 [.032-.035] DIAMETER FOR ASSEMBLY RETENTION DURING PROCESSING.
12. TE LOGO,UL,AND CSA TRADEMARKS TO APPEAR ON THIS SURFACE.
13. MATTE TIN PLATE AREA,0.00381-0.00889 [.000150-.000350] THICK, ALL FOUR SIDES, 3.56[.140] MIN.
14. OBSOLETE PARTS: OBSOLETE CIS STREAMLINING PER D.RENAUD/D.SINISI

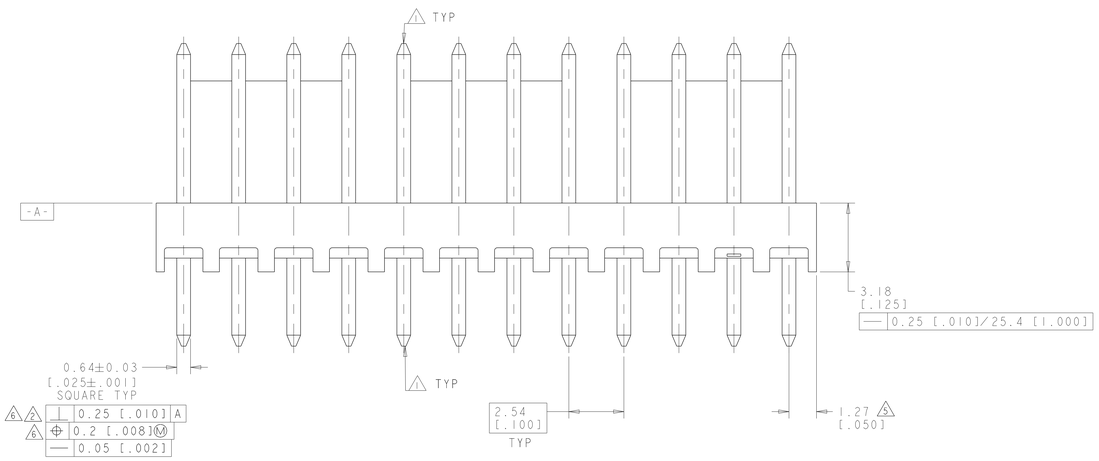

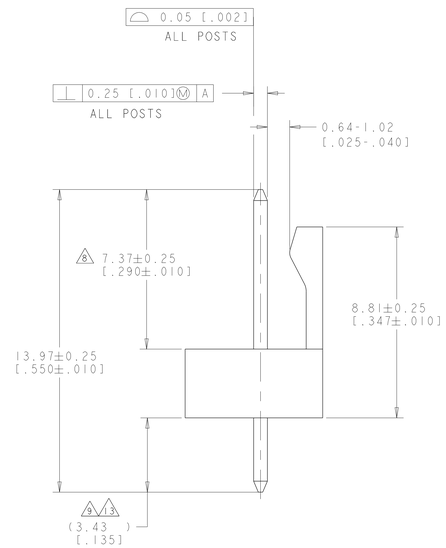

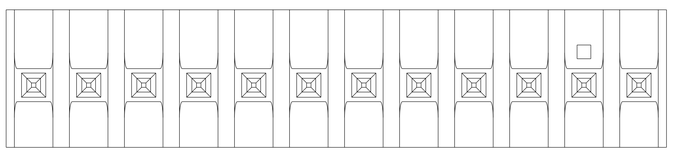

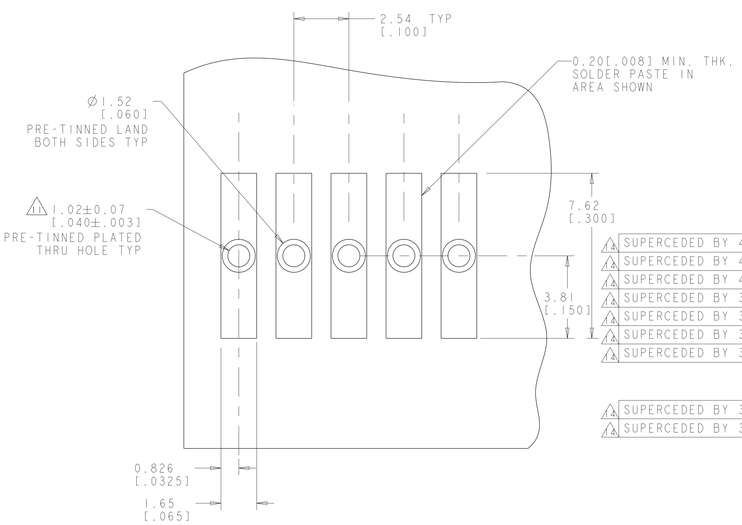

RECOMMENDED MOUNTING HOLE PATTERN 10
FOR 1.57±0.20[.062±.008] THICK P.C. BOARD

8 13	7.62 [.300]	12.70 [.500]	30.48 [1.200]	12	4-647078-2
	-	10.16 [.400]	27.94 [1.100]	11	4-647078-1
	-	7.62 [.300]	25.40 [1.000]	10	4-647078-0
	-	5.08 [.200]	22.86 [.900]	9	3-647078-9
	-	2.54 [.100]	20.32 [.800]	8	3-647078-8
	-	-	17.78 [.700]	7	3-647078-7
	-	-	15.24 [.600]	6	3-647078-6
	-	-	12.70 [.500]	5	3-647078-5
	-	-	10.16 [.400]	4	3-647078-4
	-	-	7.62 [.300]	3	3-647078-3
	-	-	5.08 [.200]	2	3-647078-2
14 SUPERCEDED BY 4-647078-2	7.62 [.300]	12.70 [.500]	30.48 [1.200]	12	1-647078-2
14 SUPERCEDED BY 4-647078-1	-	10.16 [.400]	27.94 [1.100]	11	1-647078-1
14 SUPERCEDED BY 4-647078-0	-	7.62 [.300]	25.40 [1.000]	10	1-647078-0
14 SUPERCEDED BY 3-647078-9	-	5.08 [.200]	22.86 [.900]	9	647078-9
14 SUPERCEDED BY 3-647078-8	-	2.54 [.100]	20.32 [.800]	8	647078-8
14 SUPERCEDED BY 3-647078-7	8 9 -	-	17.78 [.700]	7	647078-7
14 SUPERCEDED BY 3-647078-6	-	-	15.24 [.600]	6	647078-6
	-	-	12.70 [.500]	5	647078-5
	-	-	10.16 [.400]	4	647078-4
14 SUPERCEDED BY 3-647078-3	-	-	7.62 [.300]	3	647078-3
14 SUPERCEDED BY 3-647078-2	-	-	5.08 [.200]	2	647078-2
POST FINISH	W	G	L	NO OF POSN	PART NO

THIS DRAWING IS A CONTROLLED DOCUMENT.

DIMENSIONS: mm[INCHES]

TOLERANCES UNLESS OTHERWISE SPECIFIED:
0 PLC ±-
1 PLC ±-
2 PLC ±0.13[.005]
3 PLC ±-
4 PLC ±-
ANGLES ±0°30'
FINISH - 4

MATERIAL 4

DWN K. WHITAKER 01NOV2001
CHK D. BOSS 01NOV2001
APVD D. BOSS 01NOV2001
PRODUCT SPEC -
APPLICATION SPEC -
WEIGHT -

TE Connectivity

NAME MTA-100 HEADER ASSY,HIGH TEMPERATURE FRICTION LOCK,.025 SQUARE, STRAIGHT POST,.000015 GOLD

SIZE A0 | CAGE CODE 00779 | DRAWING NO C-647078 | RESTRICTED TO -

CUSTOMER DRAWING | SCALE 10:1 | SHEET 1 OF 1 | REV R

4806 (3/11)