REV.	DATE	DESCRIPTION
A	11/19/02	UPDATE FERRULE DIMENSIONS

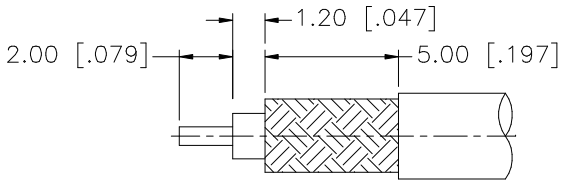

RECOMMENDED
CABLE STRIPPING DIM'S

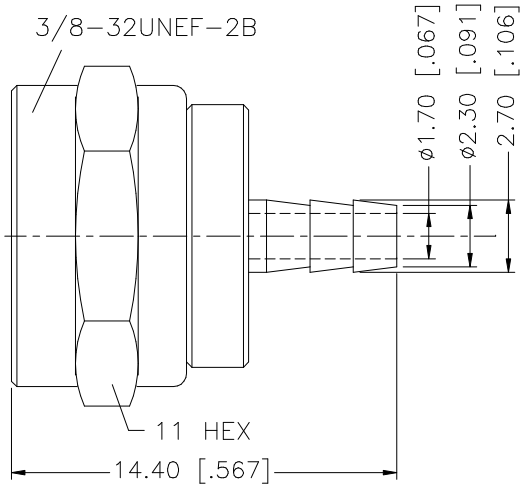

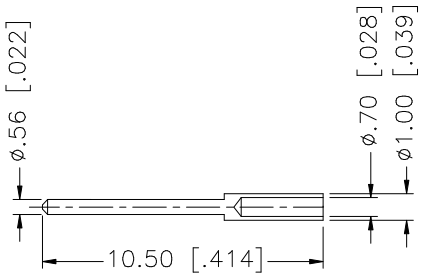

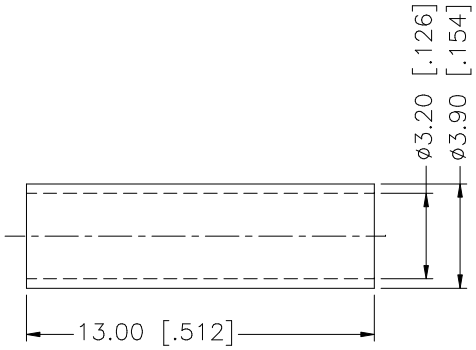

NOTES:

1. CRIMPED FERRULE
   HEX CRIMP SIZE .128"

8			
7			
6			
5			
4	FERRULE	COPPER	TIN LEAD
3	CONTACT PIN	BRASS	BRT. TIN
2	INSULATOR	TEFLON	NATURAL
1	BODY/SHELL	BRASS	TIN LEAD
	DESCRIPTION	MATERIAL	FINISH

UNLESS OTHERWISE SPECIFIED DIMENSIONS ARE IN MILLIMETERS

DIMENSIONS IN [ ] ARE IN INCHES FOR CUSTOMER REFERANCE ONLY

UNLESS OTHERWISE SPECIFIED TOLERANCES FOR INCHES ARE:

.XXX = ± 0.005"
.XX = ± 0.010"
.X = ± 0.020"

DO NOT SCALE DRAWING

APPROVALS		DATE
DRAWN	G.R.S.	11/19/02
CHECKED		
ISSUED		

Amphenol - Connex
CONNECTOR CORPORATION

TITLE
F CRIMP PLUG
(FOR RG-316/U, 174/U, 188A/U, CABLE)

SIZE	FSCM NO.	DWG. NO.	REV.
A	99001	222184.DWG	A
SCALE NA	PART NO. 222184		SHEET 1 OF 1