THIS DRAWING IS UNPUBLISHED. RELEASED FOR PUBLICATION -,- .
© COPYRIGHT - BY TYCO ELECTRONICS CORPORATION. ALL INTERNATIONAL RIGHTS RESERVED.

LOC	DIST
H	—

REVISIONS

P	LTR	DESCRIPTION	DATE	DWN	APVD
	G	ECR-06-12362	23-05-06	BM	JB
	G1	ECR-08-014461	22-10-08	AEG	WRV

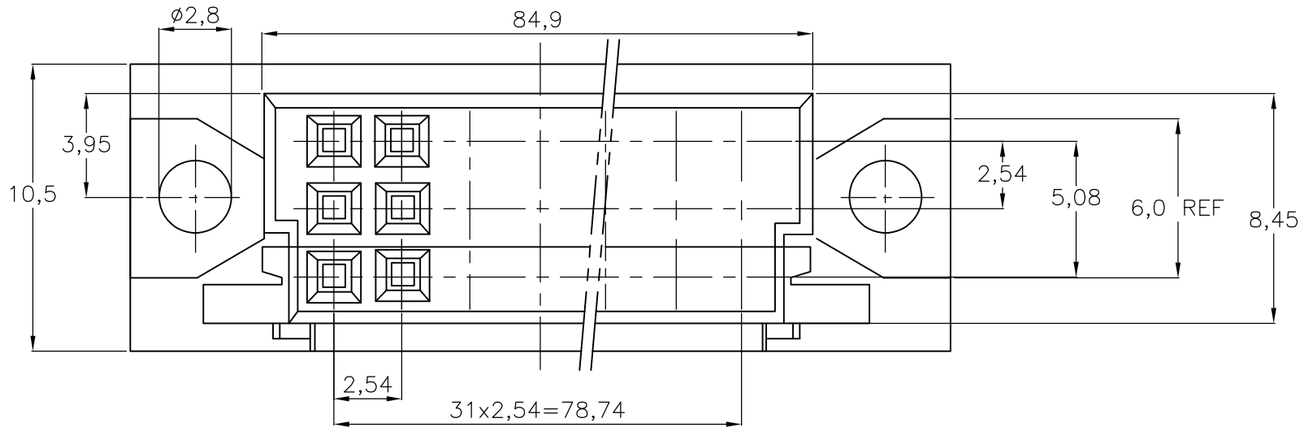

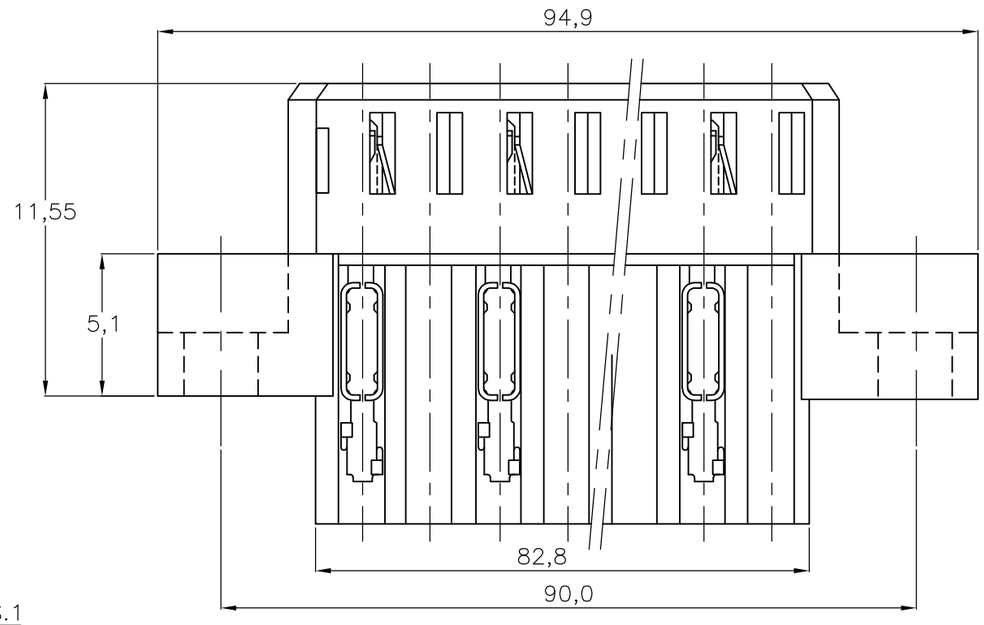

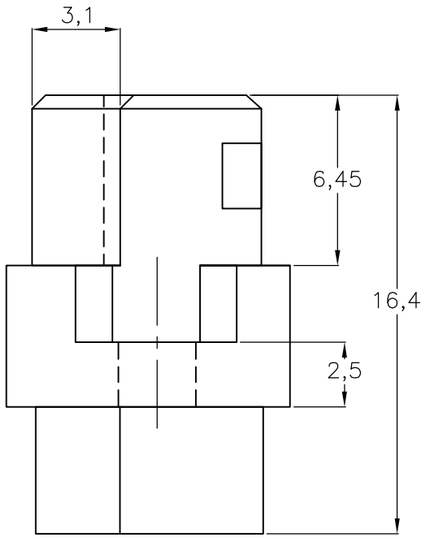

NOTES:

1. COVER P.N. 826196-1 CAN BE USED.
2. CONNECTOR PRINTED WITH PARTNUMBER 166870-...

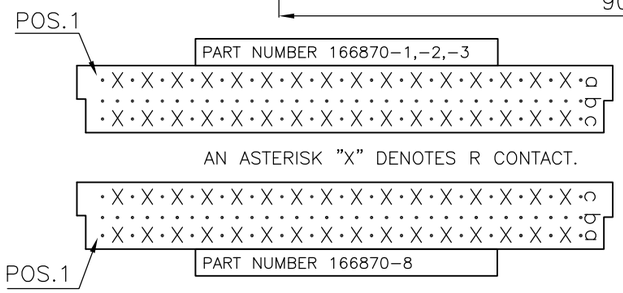

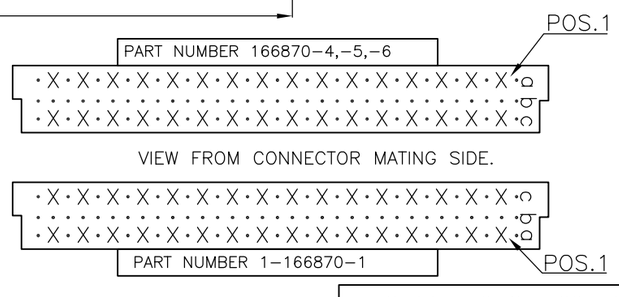

	166870-1	Housing: Glassfilled Polyester (Gray) Contacts: Phosphorbronze	Contact area: 2 µ Au over 1,25 µ Ni. Remainder TIN plating
OBSOLETE	166870-2	SAME AS -1	SAME AS -1 ONLY ON CONTACT AREA 0,8 µ AU OVER 1,25 µ Ni.
OBSOLETE	166870-3	SAME AS -1	SAME AS -1 ONLY ON CONTACT AREA 1,25 µ AU OVER 1,25 µ Ni
	166870-4	SAME AS -1	SAME AS -1
	166870-5		SAME AS -2
	166870-6		SAME AS -3
	1-166870-1		SAME AS -2
	166870-8		SAME AS -2
	PARTNUMBER	MATERIAL	PLATING

THIS DRAWING IS A CONTROLLED DOCUMENT.

DIMENSIONS: mm

TOLERANCES UNLESS OTHERWISE SPECIFIED:
0 PLC ± –
1 PLC ± –
2 PLC ± –
3 PLC ± –
4 PLC ± –
ANGLES ± –

MATERIAL	FINISH	INSUL.RANGE	WIRE RANGE
–		ø1,2 MAX.	AWG 26-22

DWN J.V.GRUNSVEN 08JUL82
CHK — 08JUL82
APVD —
PRODUCT SPEC —
APPLICATION SPEC —
WEIGHT —

Tyco Electronics
Tyco Electronics Corporation
's-Hertogenbosch, Nederland

NAME
2x16 POS BACK PANEL M.T.CONNECTOR

SIZE	CAGE CODE	DRAWING NO	RESTRICTED TO
A3	00779	C-166870	—

CUSTOMER DRAWING

SCALE	SHEET	REV
NTS	1 OF 1	G1