Jul.1.2019 Copyright 2019 HIROSE ELECTRIC CO., LTD. All Rights Reserved.
In case of consideration for using Automotive equipment / device which demand high reliability, kindly contact our sales window correspondents.

	COUNT	DESCRIPTION OF REVISIONS	BY	CHKD	DATE		COUNT	DESCRIPTION OF REVISIONS	BY	CHKD	DATE
1	1	RE-S-00371	T.O	Y.M	01.11.30						. .
					. .						. .
					. .						. .

TABLE 1

**	ATT.	PART NO.	HRS NO.
00	0dB	HSC-AT11K-A00	CL820-6001-6
01	1dB	HSC-AT11K-A01	CL820-6002-9
02	2dB	HSC-AT11K-A02	CL820-6003-1
03	3dB	HSC-AT11K-A03	CL820-6004-4
04	4dB	HSC-AT11K-A04	CL820-6005-7
05	5dB	HSC-AT11K-A05	CL820-6006-0
06	6dB	HSC-AT11K-A06	CL820-6007-2
10	10dB	HSC-AT11K-A10	CL820-6008-5
15	15dB	HSC-AT11K-A15	CL820-6009-8
20	20dB	HSC-AT11K-A20	CL820-6010-7
25	25dB	HSC-AT11K-A25	CL820-6011-0
30	30dB	HSC-AT11K-A30	CL820-6012-2

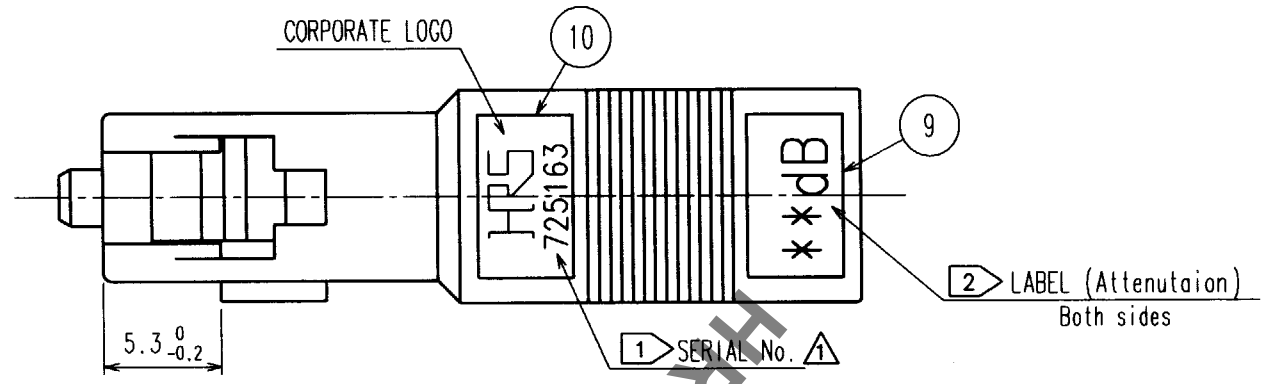

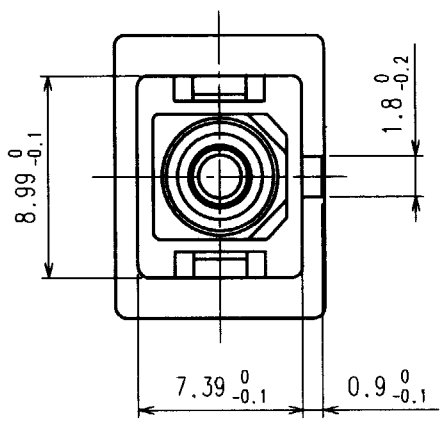

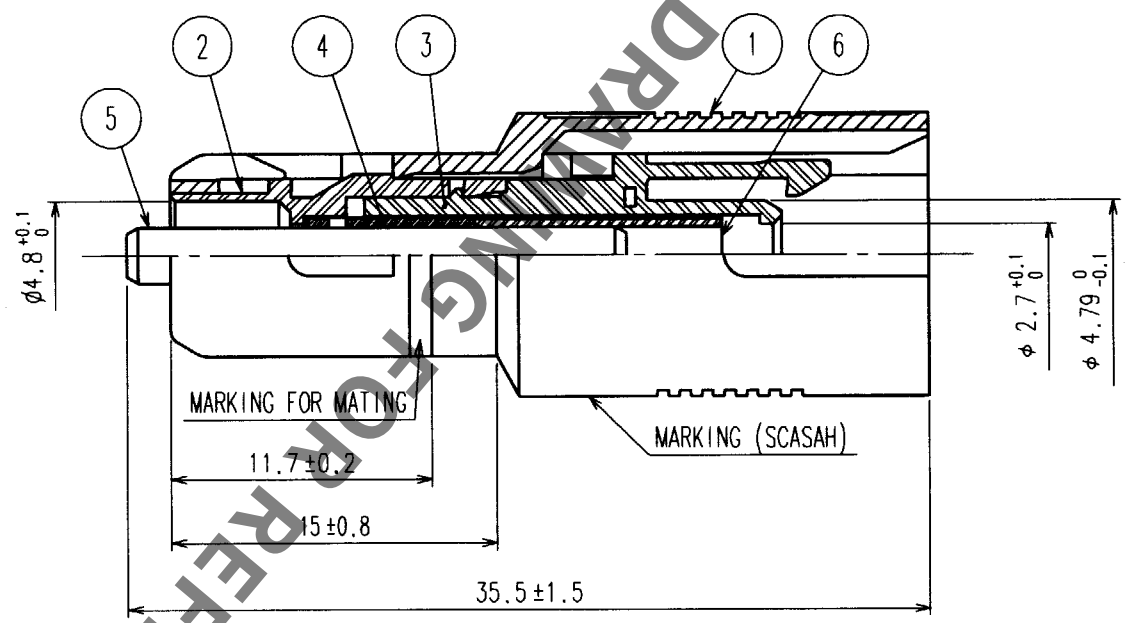

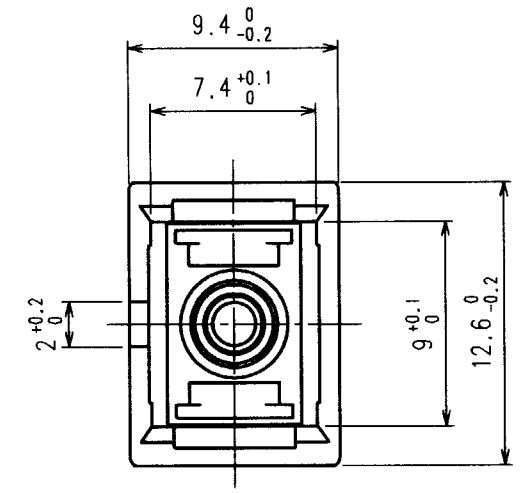

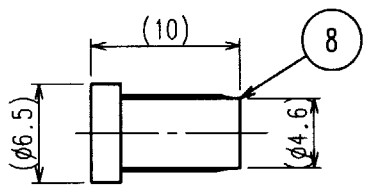

CAP(2:1)

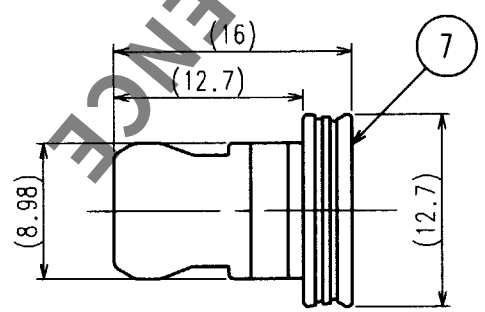

CAP(2:1)

NO.	MATERIAL	FINISH, REMARKS	NO.	MATERIAL	FINISH, REMARKS
5	Zirconia	———	10	Polyester	———
4	Stainless Steel	———	9	Polyester	———
3	Synthetic Resin	———	8	Polyester Elastomer	Black
2	Synthetic Resin	———	7	Synthetic Resin	Black
1	Zink Dicast	Nickel Plated	6	Zirconia	———

CODE NO.(OLD)	DRAWN	DESIGNED	CHECKED	APPROVED	RELEASED
	T.YOSHIDA 01.10. 9	T.YOSHIDA 01.10. 9	Y.MIYAKE 01.10. 9	Y.MIYAKE 01.10. 9	. .

SCALE 3 : 1
UNITS mm

DRAWING NO. EDC3-140867

HRS HIROSE ELECTRIC CO., LTD

PART NO. HSC-AT11K-A**

CODE NO. CL820

1/1

TO

NOTE 1 AN EXAMPLE OF SERIAL NO.
2 THE SIGN ** CORRESPONDS TO THE ATTENUATION.
3 PART NO. CORRESPONDING TO THE ATTENUATION ARE WRITTEN IN TABLE1.

HRS DRAWING FOR REFERENCE