THIS DRAWING IS UNPUBLISHED. RELEASED FOR PUBLICATION 20
© COPYRIGHT 20 BY - ALL RIGHTS RESERVED.

REVISIONS

P	LTR	DESCRIPTION	DATE	DWN	APVD
	M2	REDRAWN/REVISED PER ECO-17-001756	07DEC2017	KS	JO

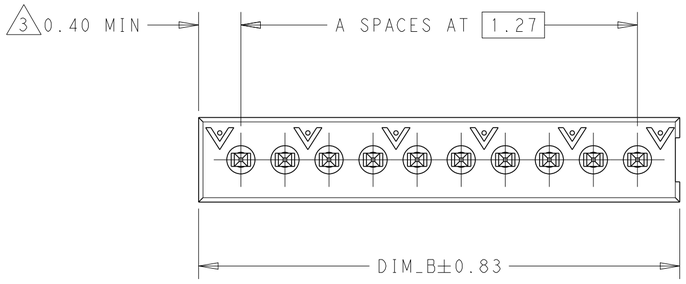

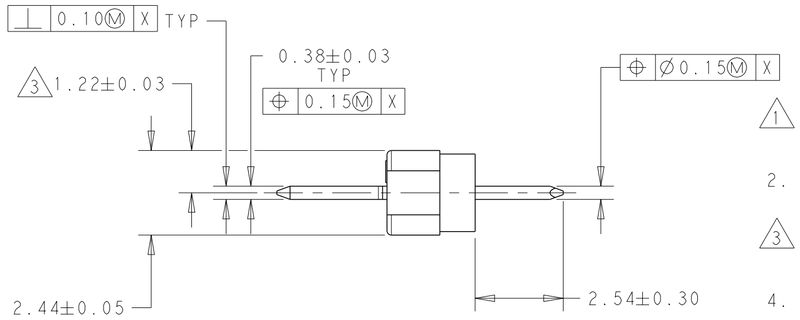

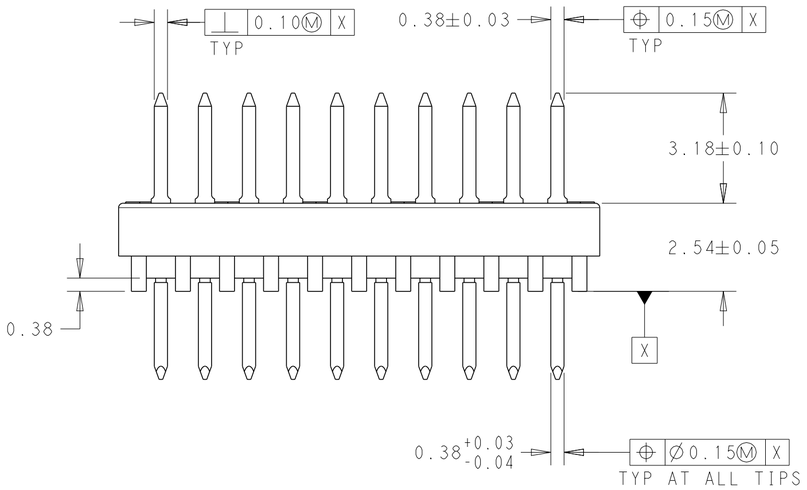

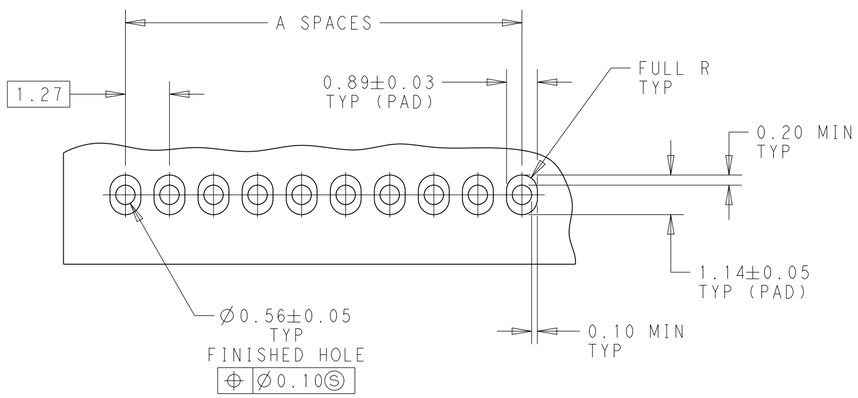

RECOMMENDED HOLE PATTERN
FOR MANUAL INSERTION

1. CONTACT AREAS PLATED WITH 0.76µm GOLD;SOLDER TAILS PLATED WITH 3.81µm MIN TIN-LEAD;ALL OVER 1.27µm MIN NICKEL.
2. NOTE DELETED.
3. THE NOTED DIMENSIONS APPLY AT THE INTERSECTION OF THE POST AND HOUSING.
4. NOTE DELETED.
5. CONTACT AREAS PLATED WITH 0.76µm GOLD;SOLDER TAILS PLATED WITH 3.81µm MIN TIN;ALL OVER 1.27µm MIN NICKEL.
6. FINISH: 0.03µm MIN GOLD ON GOLD PLATED AREA,3.81µm MATTE TIN-LEAD ON TIN PLATED AREA.UNDER PLATING SHOULD BE 1.27µm NICKEL ON ENTIRE CONTACT.GOLD AND TIN PLATING MAY NOT OVERLAP.
7. FINISH: 0.03µm MIN GOLD ON GOLD PLATED AREA,3.81µm MATTE TIN ON TIN PLATED AREA.UNDER PLATING SHOULD BE 1.27µm NICKEL ON ENTIRE CONTACT.GOLD AND TIN PLATING MAY NOT OVERLAP.
8. NOTE DELETED.
9. NOTE DELETED.
10. NOTE DELETED.
11. MATERIAL: HOUSING-LCP, COLOR-BLACK
CONTACT-COPPER ALLOY

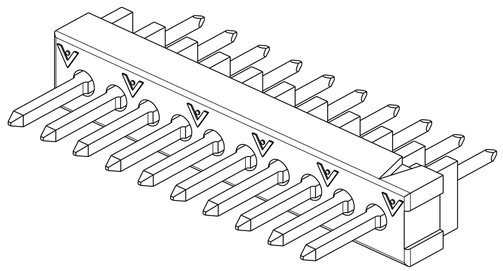

THIS DRAWING IS A CONTROLLED DOCUMENT.

DIMENSIONS: mm

TOLERANCES UNLESS OTHERWISE SPECIFIED:
0 PLC ±-
1 PLC ±0.3
2 PLC ±0.13
3 PLC ±-
4 PLC ±-
ANGLES ±0.5°

MATERIAL 11

FINISH SEE TABLE

DWN K.SHRISHAIL 07DEC2017
CHK J.OLSON 07DEC2017
APVD J.OLSON 07DEC2017
PRODUCT SPEC 108-1093
APPLICATION SPEC 114-25031
WEIGHT -

TE Connectivity

NAME HEADER ASSEMBLY, VERTICAL, UNSHROUDED, SINGLE ROW, AMPMODU System 50
-

SIZE A2 | CAGE CODE 00779 | DRAWING NO C-104178 | RESTRICTED TO -

CUSTOMER DRAWING | SCALE 8:1 | SHEET 1 OF 2 | REV N

THIS DRAWING IS UNPUBLISHED. RELEASED FOR PUBLICATION 20
© COPYRIGHT 20 BY - ALL RIGHTS RESERVED.

REVISIONS

P	LTR	DESCRIPTION	DATE	DWN	APVD
	-	SEE SHEET 1	-	-	-

7	33.40	25	26	9-104178-0
	63.88	49	50	8-104178-9
	57.53	44	45	8-104178-8
	51.18	39	40	8-104178-7
	44.83	34	35	8-104178-6
	38.48	29	30	8-104178-5
	34.67	26	27	8-104178-4
	32.13	24	25	8-104178-3
	28.32	21	22	8-104178-2
	25.78	19	20	8-104178-1
	21.97	16	17	8-104178-0
	19.43	14	15	7-104178-9
	16.89	12	13	7-104178-8
	15.62	11	12	7-104178-7
	13.08	9	10	7-104178-6
	10.54	7	8	7-104178-5
	9.27	6	7	7-104178-4
	8.00	5	6	7-104178-3
	6.73	4	5	7-104178-2
	5.46	3	4	7-104178-1
5	33.40	25	26	7-104178-0
	63.88	49	50	6-104178-9
	57.53	44	45	6-104178-8
	51.18	39	40	6-104178-7
	44.83	34	35	6-104178-6
	38.48	29	30	6-104178-5
	34.67	26	27	6-104178-4
	32.13	24	25	6-104178-3
	28.32	21	22	6-104178-2
	25.78	19	20	6-104178-1
	21.97	16	17	6-104178-0
	19.43	14	15	5-104178-9
	16.89	12	13	5-104178-8
	15.62	11	12	5-104178-7
	13.08	9	10	5-104178-6
	10.54	7	8	5-104178-5
	9.27	6	7	5-104178-4
	8.00	5	6	5-104178-3
	6.73	4	5	5-104178-2
	5.46	3	4	5-104178-1
FINISH	DIM_B	A SPACES	NO OF POSN	PART NUMBER

6	33.40	25	26	4-104178-0
	63.88	49	50	3-104178-9
	57.53	44	45	3-104178-8
	51.18	39	40	3-104178-7
	44.83	34	35	3-104178-6
	38.48	29	30	3-104178-5
	34.67	26	27	3-104178-4
	32.13	24	25	3-104178-3
	28.32	21	22	3-104178-2
	25.78	19	20	3-104178-1
	21.97	16	17	3-104178-0
	19.43	14	15	2-104178-9
	16.89	12	13	2-104178-8
	15.62	11	12	2-104178-7
	13.08	9	10	2-104178-6
	10.54	7	8	2-104178-5
	9.27	6	7	2-104178-4
	8.00	5	6	2-104178-3
	6.73	4	5	2-104178-2
	5.46	3	4	2-104178-1
1	33.40	25	26	2-104178-0
	63.88	49	50	1-104178-9
	57.53	44	45	1-104178-8
	51.18	39	40	1-104178-7
	44.83	34	35	1-104178-6
	38.48	29	30	1-104178-5
	34.67	26	27	1-104178-4
	32.13	24	25	1-104178-3
	28.32	21	22	1-104178-2
	25.78	19	20	1-104178-1
	21.97	16	17	1-104178-0
	19.43	14	15	104178-9
	16.89	12	13	104178-8
	15.62	11	12	104178-7
	13.08	9	10	104178-6
	10.54	7	8	104178-5
	9.27	6	7	104178-4
	8.00	5	6	104178-3
	6.73	4	5	104178-2
	5.46	3	4	104178-1
FINISH	DIM_B	A SPACES	NO OF POSN	PART NUMBER

THIS DRAWING IS A CONTROLLED DOCUMENT.

DIMENSIONS: mm

TOLERANCES UNLESS OTHERWISE SPECIFIED:
0 PLC ±-
1 PLC ±0.3
2 PLC ±0.13
3 PLC ±-
4 PLC ±-
ANGLES ±0.5°

MATERIAL

FINISH SEE TABLE

DWN K.SHRISHAIL 07DEC2017
CHK J.OLSON 07DEC2017
APVD J.OLSON 07DEC2017
PRODUCT SPEC 108-1093
APPLICATION SPEC 114-25031
WEIGHT -

TE Connectivity

NAME HEADER ASSEMBLY, VERTICAL, UNSHROUDED, SINGLE ROW, AMPMODU System 50
-

SIZE A2 | CAGE CODE 00779 | DRAWING NO C-104178 | RESTRICTED TO -

CUSTOMER DRAWING | SCALE 8:1 | SHEET 2 OF 2 | REV N