THIS DRAWING IS UNPUBLISHED. RELEASED FOR PUBLICATION 2009
© COPYRIGHT 2009 BY - ALL RIGHTS RESERVED.

LOC	DIST
E	B

REVISIONS

P	LTR	DESCRIPTION	DATE	DWN	APVD
	BA	NEW RELEASE	25JUL2012	KR	TN

FOR FURTHER INFORMATION SEE DATA SHEET FOR
SERIES FRN: FLAME-PROOF FUSIBLE RESISTORS

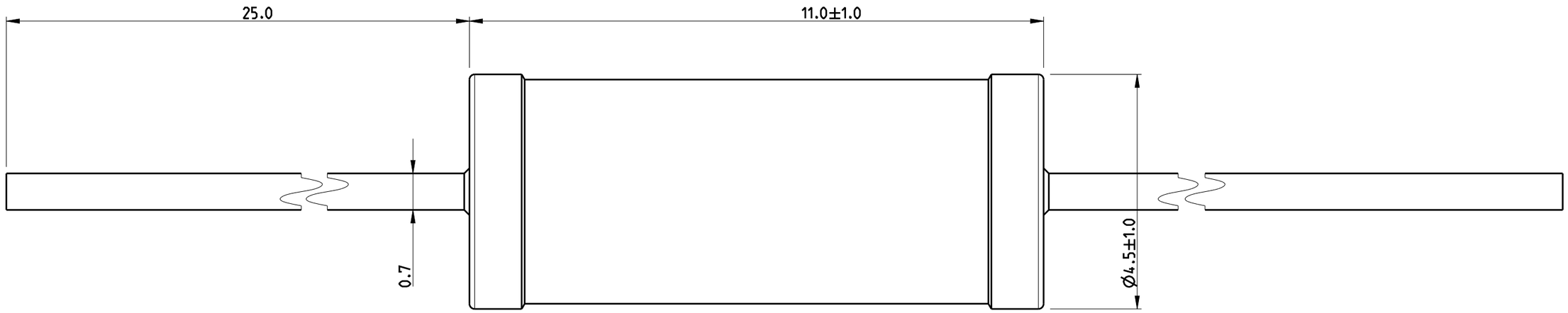

RoHS Compliant

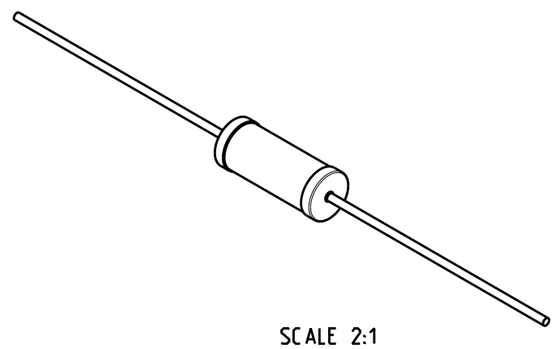

SCALE 2:1

THIS DRAWING IS A CONTROLLED DOCUMENT.

DIMENSIONS: mm

TOLERANCES UNLESS OTHERWISE SPECIFIED:

0 PLC	±0.2
1 PLC	±0.1
2 PLC	±-
3 PLC	±-
4 PLC	±-
ANGLES	±5°

MATERIAL -

FINISH -

DWN	RAGHAVENDRA K	25JUL2012
CHK	ALLAN.P	25JUL2012
APVD	TONY N	25JUL2012

PRODUCT SPEC -

APPLICATION SPEC -

WEIGHT -

Customer Drawing

TE Connectivity

NAME FLAME-PROOF FUSIBLE RESISTORS SERIES FRN200S -

SIZE	CAGE CODE	DRAWING NO	RESTRICTED TO
A3	00779	C-1879228	-

SCALE 10:1 SHEET 1 OF 1 REV BA

1470-19 (3/11)